Stormwater Operation & Maintenance Plan

Carlisle Public School
83 School Street
Carlisle, MA

Prepared by:

GARCIA•GALUSKA•DESOUSA
Consulting Engineers Inc.
370 Faunce Corner Road, Dartmouth, MA 02747-1217
(508) 998-5700 Fax: (508) 998-0883 Email: info@g-g-d.com

SITE DESCRIPTION

Location:

Carlisle Public School
83 School Street
Carlisle, MA 01741
Tel.: 978-369-6550

Owner (Responsible Party for Maintenance):

Carlisle Public School
83 School Street
Carlisle, MA 01741
Tel.: 978-369-6550

The owner shall designate a qualified professional entity or individual to perform all monitoring. The name, address and telephone number of the entity or individual shall be provided to the local Planning Board, DPW & Board of Health. The owner's representative shall be required to keep a log of all required inspections and maintenance required. The log shall be made available to the Planning Board, DPW & Board of Health.

Land Use & Site Area:

The Carlisle Public Schools is located at 83 School Street in Carlisle, MA, and sits on a 23.2 acre tract of Town owned land. The school occupies approximately 11.6 acres of the site and consists of multiple buildings with a total approximate footprint of 97,700 square feet, related parking facilities, play areas, tennis courts, and an off-site sewage disposal system.

Stormwater Management Systems:

Stormwater management systems consist of deep sump catch basins equipped with hooded outlets, water quality structures, subsurface stormwater detention systems and bio-retention cells. Stormwater discharge from the site is directed to the campus' existing drainage system, which collects drainage along Church Street. Refer to the attached as-built drawing for location of all stormwater BMP’s.

Inspections

Stormwater facilities and permanent BMP's must be inspected in accordance with this document. All documentation on scheduled inspections, times of inspections, maintenance completed, remedial actions taken to make repairs, and any modifications or reconstruction of the storm system shall be submitted to the local Planning Board, DPW, and Board of Health within (30) days of the inspection.

Disposal of the accumulated sediment must be in accordance with all applicable local, state, and federal guidelines and regulations. If any drainage structure or outfall indicates the presence of petroleum it shall be removed and disposed of immediately in accordance with applicable regulations.

Pavement Sweeping & Vacuuming:
All paved areas shall be swept twice a year, scheduled in spring and fall. All porous pavement areas shall be vacuumed twice a year, scheduled in spring and fall.

Catch Basins:
All catch basins shall be inspected to ensure they have adequate sump capacity, oil/grease hoods are in place, frames and grates are not damaged, and access manhole brick and mortar is in tact.

- Inspect catch basins four times per year.
- Clean sump annually or whenever basin sump becomes filled with sediment to half its depth (2').

If inspection indicates the presence of petroleum, it shall be removed and disposed of immediately in accordance with applicable regulations.

Drain Manholes/Overflow Control Structures:
All drain manholes and overflow control structures shall be inspected to ensure manhole frames and covers are not damaged, inlet and outlet pipes are draining freely, and access manhole brick and mortar is in tact.

- Inspect structures annually.
- Clean structures as field determined.

If inspection indicates the presence of petroleum, it shall be removed and disposed of immediately in accordance with applicable regulations.

Water Quality Structures (Stormceptor Drain Inlets & Separator Unit):

All water quality structures shall be inspected to ensure manhole frames and covers are not damaged, and unit is draining freely.

- Inspect every (6) months for the first year, and no less then annually thereafter.
- Inspect unit immediately after any fuel, oil or chemical spill.

- Clean unit once sediment depth reaches 15%, approximately 8”, of storage capacity.

If inspection indicates the presence of petroleum, it shall be removed and disposed of immediately in accordance with applicable regulations.

Subsurface Detention Systems:

All subsurface structures shall be inspected to ensure system is draining. Systems shall be inspected every 6 months and after every major storm event (1" or greater rainfall over a 24-hour period). Any accumulated sediment in subsurface piping shall be removed via a vacuum truck.

If inspection indicates the presence of petroleum, it shall be removed and disposed of immediately in accordance with applicable regulations.

Bio-retention Areas:

All bio-retention areas shall be inspected to ensure plant material is maintained and pruned, and area is free of trash. Do not store snow in bio-retention area.

- Inspect area every three (3) months.
- Remove any accumulated trash.
- Remove and replace any dead vegetation in spring or fall.
- Prune plantings in spring and fall as necessary.
- Inspect sod filter strip for erosion.
- Replace hardwood mulch every two (2) years.
- Replace entire media and all vegetation as needed should system fail.

If inspection indicates the presence of petroleum, it shall be removed and disposed of immediately in accordance with applicable regulations.

Drainage Swales:

Grass drainage swales shall be inspected for any slope erosion, ponding, or sedimentation. Inspect basin twice a year, or after a major storm event (1" rainfall in 24-hour period).

- Remove trash and debris.
- Remove accumulated sediment in swale.
- Mow side slopes at least twice a year. Grass shall not be cut shorter than 4" tall.

Stone Spillways and Level Spreaders:

Inspect all rip-rap spillways and level spreaders twice a year, or after a major storm event (1" rainfall in 24-hour period). Inspect if rip-rap has been damaged and note any type of erosion. Remove any trash, debris, and accumulated sediment.

If inspection indicates the presence of petroleum, it shall be removed and disposed of immediately in accordance with applicable regulations.

Housekeeping Operations:

1. Good house keeping and material management reduce the risk of spills or other accidental exposure of materials and substances to stormwater runoff.

   A. All materials stored on-site must be stored in a neat, orderly manner in their appropriate containers and, if possible, under a roof or other enclosure.

   B. Products shall be kept in their original containers with the original manufacturer's label.

   C. Substances should not be mixed with one another unless recommended by the manufacturer.

   D. Whenever possible, all of a product will be used up before disposing of a container.

   E. Original materials labels and material safety data sheets (MSDS) shall be kept by the Owner.

   F. Petroleum products:

      - All on-site vehicles and parking areas shall be monitored weekly for leaks and spills. Spills shall be cleaned immediately.

      - Petroleum products shall be stored under cover and shall be in tightly sealed containers that are clearly labeled.

   H. Fertilizers:

      - Fertilizers shall only be used in the minimum amounts as recommended by the manufacturer.

      - The contents of any un-used fertilizer shall be transferred to a clearly labeled, sealable plastic bin, to avoid spillage.

   I. Paints solvents.

      - All paints and solvents shall be stored in original manufacturer's containers in a covered location.

      - The use of paints and solvents shall, whenever possible, be limited to service or storage bays. Where not possible, the work area shall be protected with

impermeable drop clothes or tarps. At no point shall material be used in parking or access ways that are tributaries to the drainage system.

2. Spill Control Practices:

   A. Manufacturer's recommended methods shall be clearly posted for spill clean-up and School personnel shall be made aware of the procedures and the locations of clean-up information and supplies.

   B. Material and equipment necessary for spill clean-up will be kept on-site in a designated material storage area. Equipment will include, but not be limited to, brooms, dust pans, mops, rags, gloves, goggles, absorbent materials, sand, sawdust and plastic & metal trash containers specifically kept and labeled for this purpose.

   C. All spills must be cleaned-up immediately after discovery.

   D. Spills of toxic or hazardous material must be reported to the appropriate state, local or federal agency, as required by-law.

3. The washing of vehicles shall be limited to areas within the buildings that are served by a floor drain system and on-site tight tank. Wash water with its combination of solvents, detergents and oil/greases should not be allowed to enter any part of the on-site drainage system.

4. Snow plowing operations shall stockpile snow, ice and accumulated materials in areas where snow melt will flow into the on-site drainage systems, including drainage basins. No plowing or storage of snow is allowed in bio-retention areas or wetland resource areas.

5. During winter conditions sand use site-wide shall be applied to the minimum extent possible to maintain safe conditions.

6. The usage of Sodium Chloride for snow and ice removal is prohibited on the site per Section 4534 of the "Zoning By-Laws."

7. Winter treatment of porous pavement areas shall be limited to plowing.

Emergency Contacts:

Carlisle Fire Department: 978-369-1442

Carlisle Police Department: 978-369-1155

Appendix A

Stormwater BMP's
MA Stormwater Handbook

Deep Sump Catch Basin

Description: Deep sump catch basins, also known as oil and grease or hooded catch basins, are underground retention systems designed to remove trash, debris, and coarse sediment from stormwater runoff, and serve as temporary spill containment devices for floatables such as oils and greases.

Ability to meet specific standards

Standard	Description
2 - Peak Flow	Provides no peak flow attenuation
3 - Recharge	Provides no groundwater recharge
4 - TSS Removal	25% TSS removal credit when used for pretreatment. Because of their limited effectiveness and storage capacity, deep sump catch basins receive credit for removing TSS only if they are used for pretreatment and designed as off-line systems.
5 - Higher Pollutant Loading	Recommended as pretreatment BMP. Although provides some spill control capability, a deep sump catch basin may not be used in place of an oil grit separator or sand filter for land uses that have the potential to generate runoff with high concentrations of oil and grease such as: high-intensity-use parking lots, gas stations, fleet storage areas, vehicle and/or equipment maintenance and service areas.
6 - Discharges near or to Critical Areas	May be used as pretreatment BMP. not an adequate spill control device for discharges near or to critical areas.
7 - Redevelopment	Highly suitable.

Advantages/Benefits:

- Located underground, so limited lot size is not a deterrent.
- Compatible with subsurface storm drain systems.
- Can be used for retrofitting small urban lots where larger BMPs are not feasible.
- Provide pretreatment of runoff before it is delivered to other BMPs.
- Easily accessed for maintenance.
- Longevity is high with proper maintenance.

Disadvantages/Limitations:

- Limited pollutant removal.
- Expensive to install and maintain, resulting in high cost per unit area treated.
- No ability to control volume of stormwater
- Frequent maintenance is essential
- Requires proper disposal of trapped sediment and oil and grease
- Entrapment hazard for amphibians and other small animals

Pollutant Removal Efficiencies

- Total Suspended Solids (TSS) - 25% (for regulatory purposes)
- Nutrients (Nitrogen, phosphorus) - Insufficient data
- Metals (copper, lead, zinc, cadmium) - Insufficient data
- Pathogens (coliform, e coli) - Insufficient data

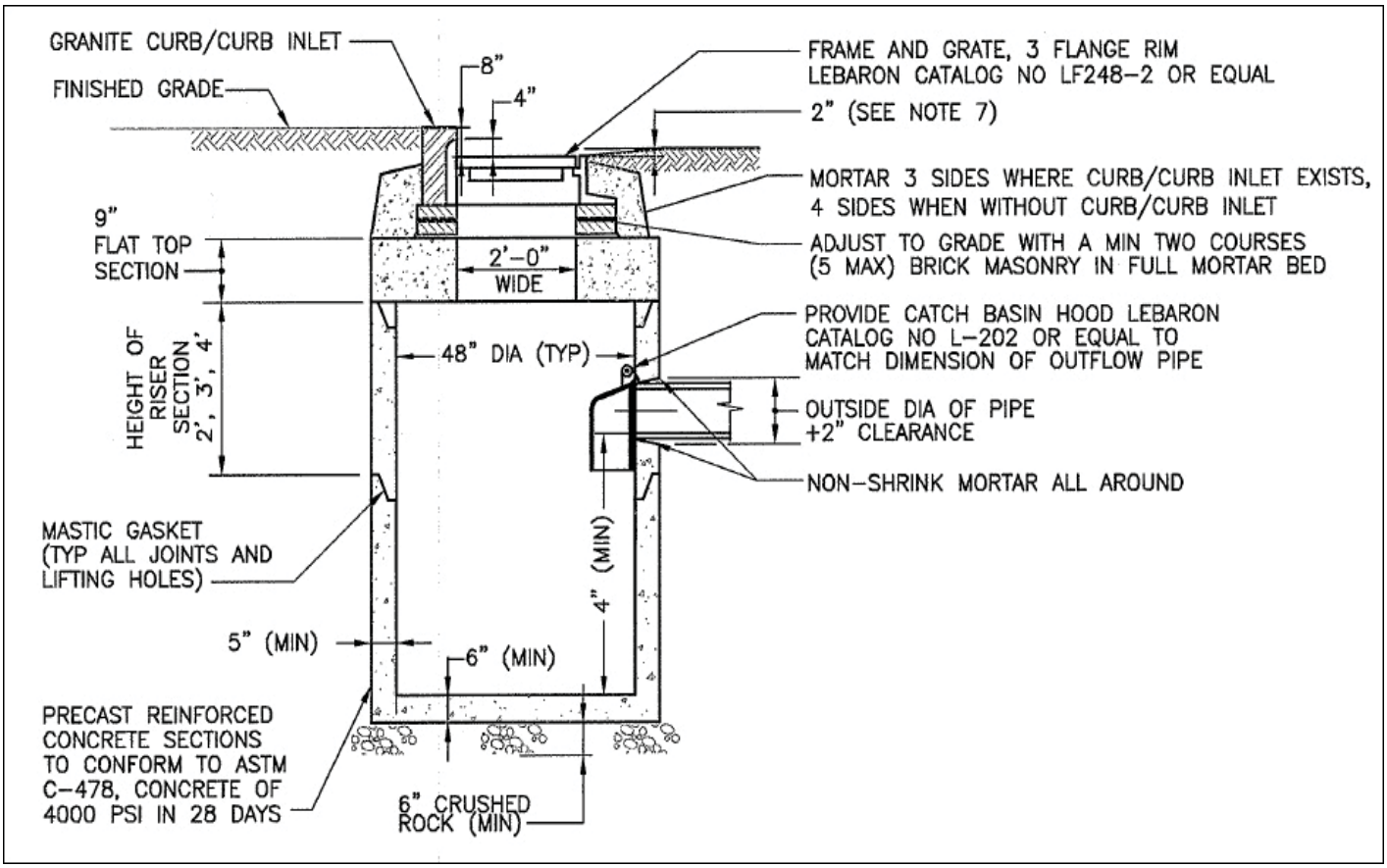

adapted from the University of New Hampshire

Maintenance

Activity	Frequency
Inspect units	Four times per year
Clean units	Four times per year or whenever the depth of deposits is greater than or equal to one half the depth from the bottom of the invert of the lowest pipe in the basin.

Special Features

All deep sump catch basins must include hoods. For MassHighway projects, consult the Stormwater Handbook for Highways and Bridges for hood requirements.

LID Alternative

Reduce Impervious Surface
Disconnect rooftop and non-rooftop runoff
Vegetated Filter Strip

Deep Sump Catch Basin

Suitable Applications

- Pretreatment
- Residential subdivisions
- Office
- Retail

Design Considerations

- The contributing drainage area to any deep sump catch basin should not exceed ¼ acre of impervious cover.
- Design and construct deep sump catch basins as off-line systems.
- Size the drainage area so that the flow rate does not exceed the capacity of the inlet grate.
- Divert excess flows to another BMP intended to meet the water quantity requirements (peak rate attenuation) or to a storm drain system. An off-line design enhances pollutant removal efficiency, because it prevents the resuspension of sediments in large storms.

Make the sump depth (distance from the bottom of the outlet pipe to the bottom of the basin) at least four feet times the diameter of the outlet pipe and more if the contributing drainage area has a high sediment load. The minimum sump depth is 4 feet. Double catch basins, those with 2 inlet grates, may require deeper sumps. Install the invert of the outlet pipe at least 4 feet from the bottom of the catch basin grate.

The inlet grate serves to prevent larger debris from entering the sump. To be effective, the grate must have a separation between the grates of one square inch or less. The inlet openings must not allow flows greater than 3 cfs to enter the deep sump catch basin. If the inlet grate is designed with a curb cut, the grate must reach the back of the curb cut to prevent bypassing. The inlet grate must be constructed of a durable material and fit tightly into the frame so it won't be dislodged by automobile traffic. The inlet grate must not be welded to the frame so that sediments may be easily removed. To facilitate maintenance, the inlet grate must be placed along the road shoulder or curb line rather than a traffic lane.

Note that within parking garages, the State Plumbing Code regulates inlet grates and other stormwater management controls. Inlet grates inside parking garages are currently required to have much smaller openings than those described herein.

To receive the 25% removal credit, hoods must be used in deep sump catch basins. Hoods also help contain oil spills. MassHighway may install catch basins without hoods provided they are designed, constructed, operated, and maintained in accordance with the Mass Highway Stormwater Handbook.

Install the weep hole above the outlet pipe. Never install the weep hole in the bottom of the catch basin barrel.

Site Constraints

A proponent may not be able to install a deep sump catch basin because of:

- Depth to bedrock;
- High groundwater;
- Presence of utilities; or
- Other site conditions that limit depth of excavation because of stability.

Maintenance

Regular maintenance is essential. Deep sump catch basins remain effective at removing pollutants only if they are cleaned out frequently. One study found that once 50% of the sump volume is filled, the catch basin is not able to retain additional sediments.

Inspect or clean deep sump basins at least four times per year and at the end of the foliage and snow-removal seasons. Sediments must also be removed four times per year or whenever the depth of deposits is greater than or equal to one half the depth from the bottom of the invert of the lowest pipe in the basin. If handling runoff from land uses with higher potential pollutant loads or discharging runoff near or to a critical area, more frequent cleaning may be necessary.

Clamshell buckets are typically used to remove sediment in Massachusetts. However, vacuum trucks are preferable, because they remove more trapped sediment and supernatant than clamshells. Vacuuming is also a speedier process and is less likely to snap the cast iron hood within the deep sump catch basin.

Always consider the safety of the staff cleaning deep sump catch basins. Cleaning a deep sump catch basin within a road with active traffic or even within a parking lot is dangerous, and a police detail may be necessary to safeguard workers.

Although catch basin debris often contains concentrations of oil and hazardous materials such as petroleum hydrocarbons and metals, MassDEP classifies them as solid waste. Unless there is evidence that they have been contaminated by a spill or other means, MassDEP does not routinely require catch basin cleanings to be tested before disposal. Contaminated catch basin cleanings must be evaluated in accordance with the Hazardous Waste Regulations, 310 CMR 30.000, and handled as hazardous waste.

In the absence of evidence of contamination, catch basin cleanings may be taken to a landfill or other facility permitted by MassDEP to accept solid waste, without any prior approval by MassDEP. However, some landfills require catch basin cleanings to be tested before they are accepted.

With prior MassDEP approval, catch basin cleanings may be used as grading and shaping materials at landfills undergoing closure (see Revised Guidelines for Determining Closure Activities at Inactive Unlined Landfill Sites) or as daily cover at active landfills. MassDEP also encourages the beneficial reuse of catch basin cleanings whenever possible. A Beneficial Reuse Determination is required for such use.

MassDEP regulations prohibit landfills from accepting materials that contain free-draining liquids. One way to remove liquids is to use a hydraulic lift truck during cleaning operations so that the material can be decanted at the site. After loading material from several catch basins into a truck, elevate the truck so that any free-draining liquid can flow back into the structure. If there is no free water in the truck, the material may be deemed to be sufficiently dry. Otherwise the catch basin cleanings must undergo a Paint Filter Liquids Test. Go to www. Mass.gov/dep/recycle/laws/cafacts.doc for information on all of the MassDEP requirements pertaining to the disposal of catch basin cleanings.

Oil/Grit Separators

Description: Oil/grit separators are underground storage tanks with three chambers designed to remove heavy particulates, floating debris and hydrocarbons from stormwater.

Stormwater enters the first chamber where heavy sediments and solids drop out. The flow moves into the second chamber where oils and greases are removed and further settling of suspended solids takes place. Oil and grease are stored in this second chamber for future removal. After moving into the third outlet chamber, the clarified stormwater runoff is then discharged to a pipe and another BMP. There are other separators that may be used for spill control.

Advantages/Benefits:

- Located underground so limited lot size not a deterrent in urban areas with small lots
- Can be used for retrofits
- Can be installed in any soil or terrain.
- Public safety risks are low.

Disadvantages/Limitations:

- Limited pollutant removal; cannot effectively remove soluble pollutants, fine particles, or bacteria
- Can become a source of pollutants due to resuspension of sediment unless properly maintained
- Susceptible to flushing during large storms
- Limited to relatively small contributing drainage areas
- Requires proper disposal of trapped sediments and oils
- May be expensive to construct and maintain
- Entrapment hazard for amphibians and other small animals

Pollutant Removal Efficiencies

- Total Suspended Solids (TSS) - 25% for oil grit separator, only when placed off-line and only when used for pretreatment
- Nutrients (Nitrogen, phosphorus) - Insufficient data
- Metals (copper, lead, zinc, cadmium) - Insufficient data
- Pathogens (coliform, e coli) - Insufficient data

Ability to meet specific standards

Standard	Description
2 - Peak Flow	Provides no peak flow attenuation
3 - Recharge	Provides no groundwater recharge
4 - TSS Removal	25% TSS removal credit when used for pretreatment and placed off-line.
5 - Higher Pollutant Loading	MassDEP requires a pretreatment BMP, such as an oil/grit separator that is capable of removing oil and grease, for land uses with higher potential pollutant loads where there is a risk of petroleum spills such as: high intensity use parking lots, gas stations, fleet storage areas, vehicle and/or equipment maintenance and service areas.
6 - Discharges near or to Critical Areas	May be a pretreatment BMP when combined with other practices. May serve as a spill control device.
7 - Redevelopment	Highly suitable.

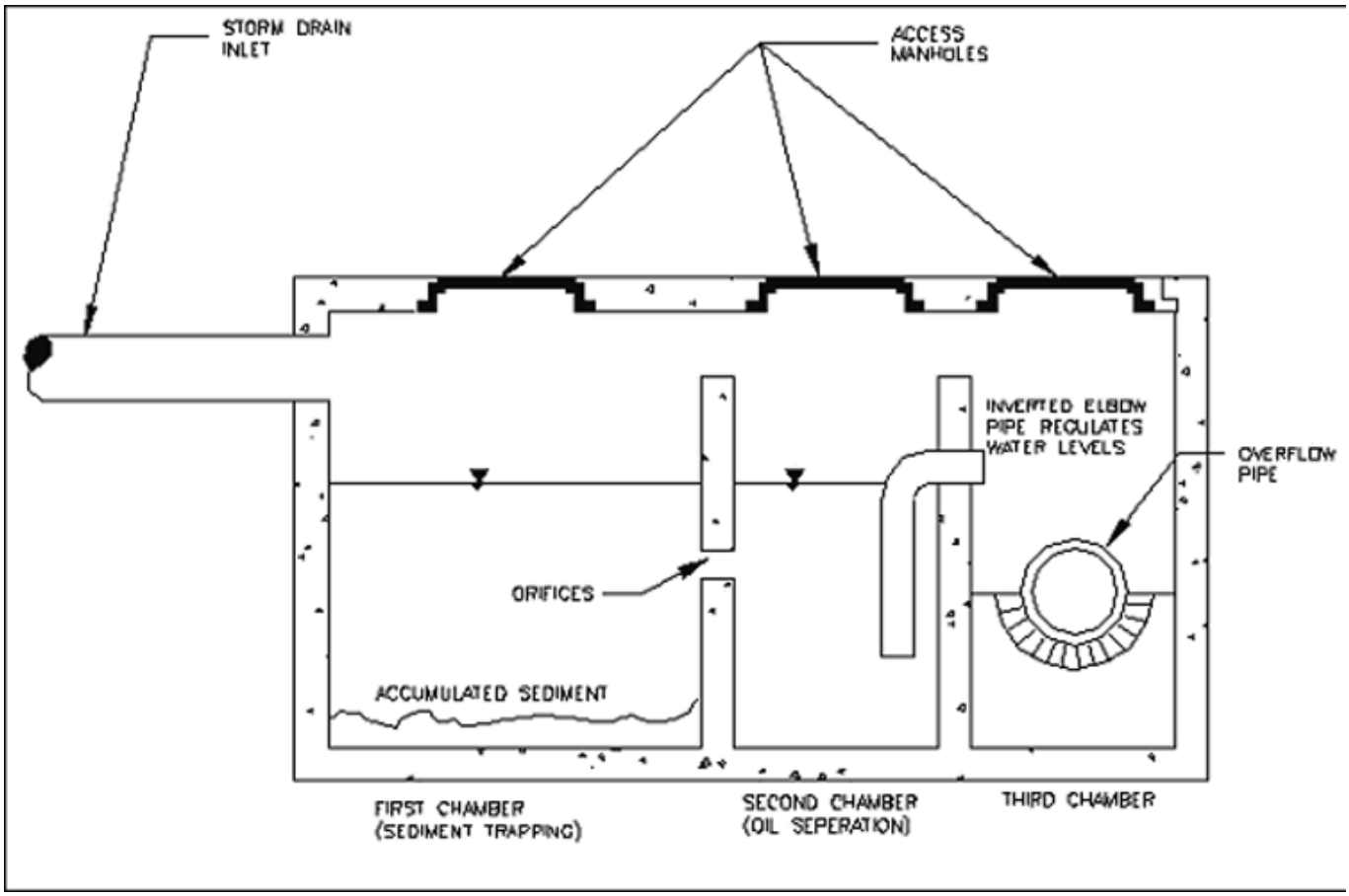

MassHighway 2004

Maintenance

Activity	Frequency
Inspect units	After every major storm but at least monthly
Clean units	Twice a year

Oil/Grit Separators

Applicability

Oil grit separators must be used to manage runoff from land uses with higher potential pollutant loads where there is a risk that the stormwater is contaminated with oil or grease. These uses include the following:

- High-Intensity-Use Parking Lots
- Gas Fueling Stations
- Vehicles (including boats, buses, cars, and trucks) and Equipment Service and Maintenance Areas
- Fleet Storage Areas

Design Considerations

- Dovetail design practices, source controls and pollution prevention measures with separator design.
- Place separators before all other structural stormwater treatment practices (except for structures associated with source control/ pollution prevention such as drip pans and structural treatment practices such as deep sump catch basins that double as inlets).
- Limit the contributing drainage area to the oil/grit separator to one acre or less of impervious cover.
- Use oil grit separators only in off-line configurations to treat the required water quality volume.
- Provide pool storage in the first chamber to accommodate the required water quality volume or 400 cubic feet per acre of impervious surface. Confirm that the oil/grit separator is designed to treat the required water quality volume.
- Make the permanent pool at least 4 feet deep.
- Design the device to pass the 2-year 24-hour storm without interference and provide a bypass for larger storms to prevent resuspension of solids.
- Make oil/grit separator units watertight to prevent possible groundwater contamination.
- Use a trash rack or screen to cover the discharge outlet and orifices between chambers.
- Provide each chamber with manholes and access stepladders to facilitate maintenance and allow cleaning without confined space entry.
- Seal potential mosquito entry points.
- Install any pump mechanism downstream of the separator to prevent oil emulsification.
- Locate an inverted elbow pipe between the second and third chambers and with the bottom of the elbow pipe at least 3 feet below the second chamber's permanent pool.
- Provide appropriate removal covers that allow access for observation and maintenance.
- Where the structure is located below the seasonal high groundwater table, design the structure to prevent flotation.
- For gas stations, automobile maintenance and service areas, and other areas where large volumes of petroleum and oil are handled, consider adding coalescing plates to increase the effectiveness of the device and reduce the size of the units. A series of coalescing plates constructed of oil-attracting materials such as polypropylene typically spaced one inch apart attracts small droplets of oil, which begin to concentrate until they are large enough to float to the surface.

Maintenance

Sediments and associated pollutants and trash are removed only when inlets or sumps are cleaned out, so regular maintenance is essential. Most studies have linked the failure of oil grit separators to the lack of regular maintenance. The more frequent the cleaning, the less likely sediments will be resuspended and subsequently discharged. In addition, frequent cleaning also makes more volume available for future storms and enhances overall performance. Cleaning includes removal of accumulated oil and grease and sediment using a vacuum truck or other ordinary catch basin cleaning device. In areas of high sediment loading, inspect and clean inlets after every major storm. At a minimum, inspect oil grit separators monthly, and clean them out at least twice per year. Polluted water or sediments removed from an oil grit separator should be disposed of in accordance with all applicable local, state and federal laws and regulations including M.G.L.c. 21C and 310 CMR 30.00.

References:

American Petroleum Institute, 2002, Management of Water Discharges: Design and Operations of Oil-Water Separators, 1st Edition, Revision 90, American Petroleum Institute.

Arizona Department of Environmental Quality, 1996, BADCT Guidance Document for Pretreatment with Oil/Water Separators, OFR 96-15, http://www.azdeq.gov/environ/water/permits/download/owsbadct.pdf

Beychok, Milton, Wikipedia, API Oil-Water Separator, http://en.wikipedia.org/wiki/API_oil-water_separator

Center for Watershed Protection, Performance of Oil-Grit Separators in Removing Pollutants at Small Sites, Technical Note #101 from Watershed Protection Techniques. 2(3): 539-542

Houston, City of, Harris County, Harris County Flood Control District, 2001, Storm Water Quality Management Guidance Manual, Section 4.4.2, p. 4-84 to 4-89, http://www.cleanwaterclearchoice.org/downloads/professional/guidance_manual_full.pdf

Idaho Department of Environmental Quality, 2005, Storm Water Best Management Practices Catalog, Oil/Water Separator, BMP 18, pp. 91 to 95, http://www.deq.idaho.gov/water/data_reports/storm_water/catalog/sec_4/bmps/18.pdf

Massachusetts Highway Department, 2004, Storm Water Handbook for Highways and Bridges, p.

Minton, Gary. 2002, Stormwater Treatment, RPA Associates, Seattle, WA, p. 120

New Zealand Water Environment Research Foundation, 2004, On-Site Stormwater Management Guideline, Section 5.10, pp. 23 to 24, http://www.nzwwa.org.nz/Section%205.pdf

Schueler, T.R., 1987, Controlling Urban Runoff: A Practical Manual for Planning and Designing Urban BMPs, Metropolitan Washington Council of Governments, Washington, DC.

U.S. EPA, 1999, Storm Water Technology Fact Sheet, Water Quality Inlets, EPA 832-F-99-029, http://www.epa.gov/owm/mtb/wtrqlty.pdf

Proprietary Separators

Description: A proprietary separator is a flow-through structure with a settling or separation unit to remove sediments and other pollutants. They typically use the power of swirling or flowing water to separate floatables and coarser sediments, are typically designed and manufactured by private businesses, and come in different sizes to accommodate different design storms and flow conditions. Some rely solely on gravity separation and contain no swirl chamber. Since proprietary separators can be placed in almost any location on a site, they are particularly useful when either site constraints prevent the use of other stormwater techniques or as part of a larger treatment train. The effectiveness of proprietary separators varies greatly by size and design, so make sure that the units are sized correctly for the site's soil conditions and flow profiles, otherwise the unit will not work as designed.

Ability to meet specific standards

Standard	Description
2 - Peak Flow	Provides no peak flow attenuation
3 - Recharge	Provides no groundwater recharge
4 - TSS Removal	Varies by unit. Must be used for pretreatment and be placed first in the treatment train to receive TSS removal credit. Follow procedures described in Chapter 4 to determine TSS credit.
5 - Higher Pollutant Loading	Suitable as pretreatment device.
6 - Discharges near or to Critical Areas	Suitable as pretreatment device or potentially a spill control device
7 - Redevelopment	Suitable as pretreatment device or treatment device if it is not possible to provide other BMPs.

Advantages/Benefits:

- Removes coarser sediment.
- Useful on constrained sites.
- Can be custom-designed to fit specific needs of a specific site.

Disadvantages/Limitations:

- Removes only coarse sediment fractions
- Provides no recharge to groundwater
- No control of the volume of runoff
- Frequent maintenance is essential

Pollutant Removal Efficiencies

- Total Suspended Solids (TSS) - Varies.
- Nutrients (Nitrogen, phosphorus) - Insufficient data
- Metals (copper, lead, zinc, cadmium) - Insufficient data
- Pathogens (coliform, e coli) - Insufficient data

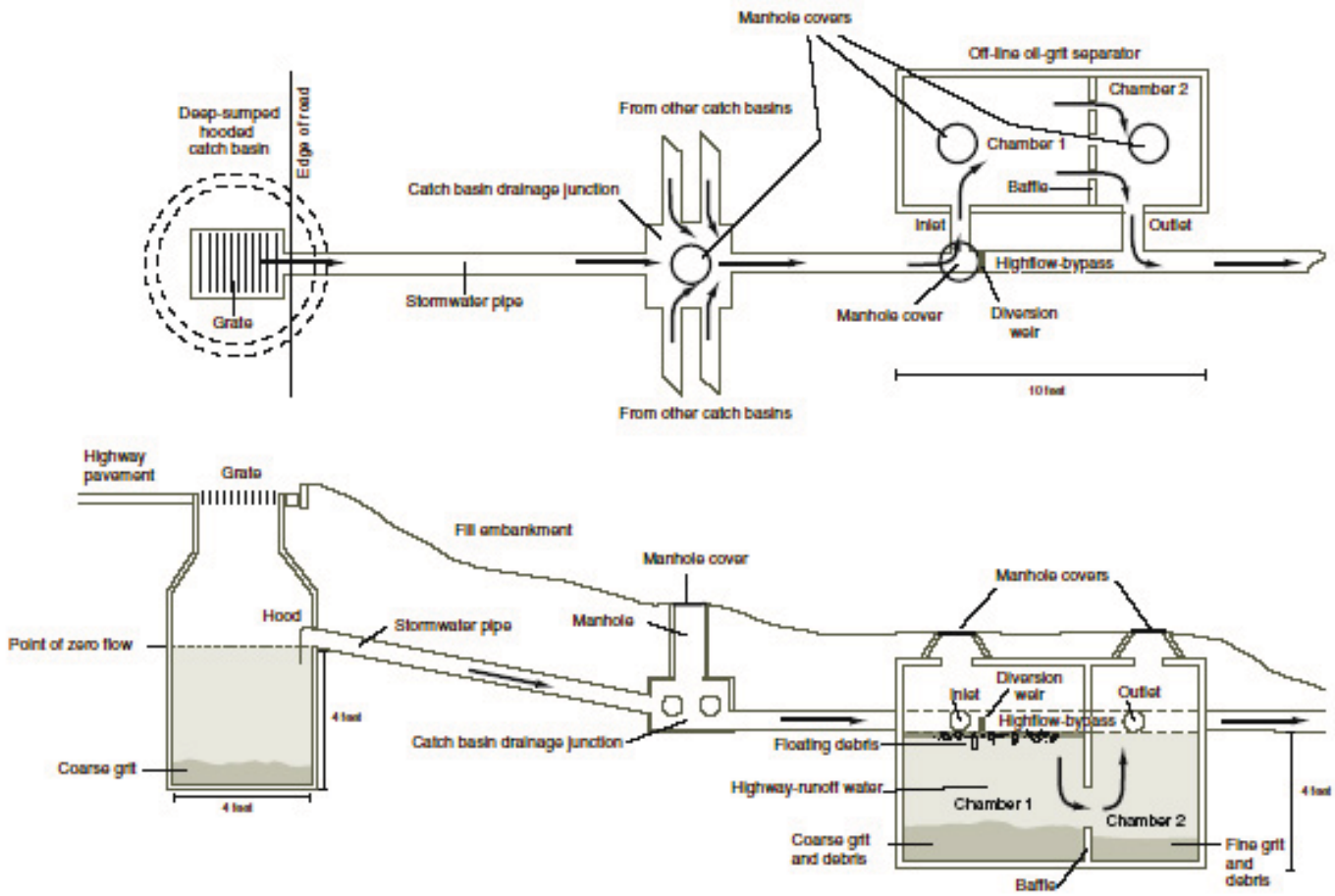

Schematic section of a deep-sump hooded catch basin and a 1,500-gallon off-line water quality inlet.

adapted from the MassHighway Storm Water Handbook for Highways

Maintenance

Activity	Frequency
Inspect in accordance with manufacturer requirements, but no less than twice a year following installation, and no less than once a year thereafter.	See activity
Remove sediment and other trapped pollutants at frequency or level specified by manufacturer.	See manufacturer information

Special Features

Can be custom-designed to fit specific needs at a specific site.

LID Alternative

Reduce impervious surfaces
Disconnect runoff from non-metal roofs, roadways, and driveways

Proprietary Separators

Applicability

Because they have limited pollutant removal and storage capacity, proprietary separators must be used for pretreatment only. Because they are placed underground, proprietary separators may be the only structural pretreatment BMPs feasible on certain constrained redevelopment sites where space or storage is not available for more effective BMPs. They may be especially useful in ultra-urban settings such as Boston or Worcester. Some proprietary separators may be used for spill control.

Effectiveness

Proprietary separators have a wide range of TSS efficiencies. To assess the ability of proprietary separators to remove TSS and other pollutants, a proponent should follow the procedures set forth in Chapter 4. The specific units proposed for a particular project cannot be effective unless they are sized correctly. Proprietary separators are usually sized based on flow rate. A proprietary separator must be sized to treat the required water quality volume. To be effective at removing TSS and other pollutants the system must be designed, constructed, and maintained in accordance with the manufacturer's specifications and the specifications in this Handbook.

Planning Considerations

To receive TSS removal credit, proprietary separators must be used for pretreatment and placed at the beginning of a stormwater treatment train. They can be configured either in-line or if subject to higher flows, off-line to reduce scouring. They must be sized in accordance with the manufacturer's specifications and the specifications in this Handbook. Proprietary separators used as spill control devices may have to be sized differently than those used for TSS removal.

Design

The design of proprietary separators varies by manufacturer. Units are typically precast concrete, but larger systems may be cast in place. Units may have baffles or other devices to direct incoming water into and through a series of chambers, slowing the water down to allow sediment to drop out into internal storage areas, then directing this pre-treated water to exit to other treatment or infiltration devices. In some cases, flow will be introduced tangentially, to induce swirl or vortex. Units may include skirts or weirs, to keep trapped sediments from becoming re-entrained. Some units combine a catch basin with the treatment function, providing off-line rather than in-line treatment.

Generally they are placed below ground on a gravel or stone base. Make sure all units contain inspection and access ports so that they may be inspected and cleaned. During design, take care to place the inspection and access ports where they will be accessible. Do not place the ports in locations such as travel lanes of roadways/highways and parking stalls.

Construction

Install construction barriers around the excavation area to prevent access by pedestrians. Use diversions and other soil erosion practices up-slope of the proprietary separator to prevent runoff from entering the site before construction of the units is complete. Implement practices to prevent construction period runoff from being discharged to the units until construction is complete and the soil is stabilized. Stabilize all surrounding area and any established outlets. Remove temporary structures after vegetation is established.

Maintenance

Inspect and clean these units in strict accordance with manufacturers' recommendations and requirements. Clean the units using the method specified by the manufacturer. Vactor trucks are typically used to clean these units. Clamshell buckets typically used for cleaning catch basins are almost never allowed by manufacturers. Sometimes it will be necessary to remove sediment manually.

Adapted from:
MassHighway. Storm Water Handbook for Highways and Bridges. May 2004.

Rinker MATERIALS™

THE STORMCEPTOR® SYSTEM

Owner's Manual

Stormceptor® Owner's Manual Contents

1. Stormceptor Overview

2. Stormceptor System Operation

3. Identification of Stormceptor

4. Stormceptor Maintenance Guidelines

   4.1 Recommended Maintenance Procedure

   4.2 Disposal of Trapped Material from Stormceptor

5. Recommended Safety Procedures

6. Stormceptor Monitoring Protocol

   6.1 Pollutants to be Monitored

   6.2 Monitoring Methodology

		Page
List of Tables		
Table 1.	Stormceptor Dimensions	4
Table 2.	Stormceptor Capacities	5
Table 3.	Sediment Depths Indicating Required Maintenance	5
Table 4.	Monitoring Pollutants	9
List of Figures		
Figure 1.	Single Inlet/Outlet "Disc" Insert In-Line Stormceptor	6
Figure 2.	STC 450*i* Inlet Stormceptor	6

Rev. 3/2006

Thank You!

We want to thank you for selecting the Stormceptor System to use in your efforts in protecting the environment. Stormceptor is one of the most effective and maintenance friendly storm water quality treatment devices available. If you have any questions regarding the operation and maintenance of the Stormceptor System, please call your local Rinker Materials representative, or the Stormceptor Information Line at (800) 909-7763.

1. *Stormceptor Overview*

The Stormceptor System is a water quality device used to remove total suspended solids (TSS) and free oil (TPH) from storm water run-off. Stormceptor takes the place of a conventional manhole or inlet structure within a storm drain system. Rinker Materials manufactures the Stormceptor System with precast concrete components and a fiberglass disc insert. A fiberglass Stormceptor can also be provided for special applications.

The Stormceptor System product line consists of four patented designs:

- The In-Line (Conventional) Stormceptor, available in eight model sizes ranging from 900 to 7200 gallon storage capacity.
- An In-Line (Series) Stormceptor is available in three model sizes ranging from 11,000 to 16,000 gallon storage capacity.
- The Submerged Stormceptor, an in-line system designed for oil and sediment removal in partially submerged pipes, available in all models sizes ranging from 450*i* to 16,000 gallon storage capacity.
- The Inlet Stormceptor is a 450 gallon unit designed for small drainage areas.

Stormceptor removes free oil and suspended solids from storm water preventing hazardous spills and non-point source pollution from entering downstream lakes and rivers. Rinker Materials and its affiliates market and manufacture the Stormceptor System in the United States and Australia. Several thousand Stormceptor Systems have been installed in various locations throughout North America, Australia and the Caribbean since 1990.

In the Stormceptor, a fiberglass insert separates the treatment chamber from the by-pass chamber. The different insert designs are illustrated in Figures 1 and 2. These designs are easily distinguishable from the surface once the cover has been removed.

There are four versions of the in-line disc insert: single inlet/outlet, multiple inlet, in-line series insert and submerged designs. In the non-submerged "disc" design you will be able to see the inlet pipe, the drop pipe opening to the lower chamber, the weir, a 6" oil inspection/cleanout pipe, a large 24" riser pipe opening offset on the outlet side of the structure, and the outlet pipe from the unit. The weir will be around the 24" outlet pipe on the multiple inlet disc insert and on large diameter pipe applications.

The STC *(*series) Stormceptors consist of two chambers comprised of similar fiberglass inserts. These units also contain a 6" oil/inspection cleanout pipe and 24" outlet riser pipes.

The submerged disc insert has a higher weir and a second inlet drop pipe. In the inlet design you will be able to see an inlet drop pipe and an outlet riser pipe as well as a central oil inspection/cleanout port.

2. *Stormceptor System Operation*

The Stormceptor consists of a lower treatment chamber, which is always full of water, and a by-pass chamber. Storm water flows into the by-pass chamber via the storm sewer pipe or grated inlet (Inlet Stormceptor). Normal flows are diverted by a weir and drop pipe arrangement into a treatment chamber. Water flows up through the submerged outlet pipe based on the head at the inlet weir and is discharged back into the by-pass chamber downstream of the weir. The treated storm water continues down stream via the storm sewer system.

Oil and other liquids with a specific gravity less than water rise in the treatment chamber and become trapped under the fiberglass insert. Sediment will settle to the bottom of the chamber by gravity. The circular design of the treatment chamber is critical to prevent turbulent eddy currents and to promote settling.

During infrequent high flow conditions, storm water will by-pass the weir and be conveyed to the outlet sewer directly. The by-pass is an integral part of the Stormceptor since other oil/grit separators have been noted to scour during high flow conditions (Schueler and Shepp, 1993).

For further details please refer to *The Stormceptor System Technical Manual*.

The key benefits of Stormceptor include:

- Capable of removing more than 80% of the total sediment load when properly applied as a source control for small drainage areas
- Removes free oil from storm water during normal flow conditions
- Will not scour or resuspend trapped pollutants
- Ideal spill control device for commercial and industrial developments
- Vertical orientation facilitates maintenance and inspections
- Small foot print

3. *Identification of Stormceptor*

All In-Line (including Submerged) Stormceptors are provided with their own frame and cover. The cover has the name STORMCEPTOR clearly embossed on it to allow easy identification of the unit. The name Stormceptor is not embossed on the inlet models due to the variability of inlet grates used/approved across North America. You will be able to identify the Inlet Stormceptor by looking into the grate since the insert will be visible.

Once you have located a unit, there still may be a question as to the size of the unit. Comparing the measured depth from the water level (bottom of insert) to the bottom of the tank with Table 1 should help determine the size of the unit.

Table 1. Stormceptor Dimensions*	
Model	**Pipe Invert to Top of Base Slab**
450*i*	60"
900	55"
1200	71"
1800	105"
2400	94"
3600	134"
4800	128"
6000	150"
7200	134"
11000*s*	128"**
13000*s*	150"**
16000*s*	134"**

** Depths are approximate*
*** Depths per structure*

Starting in 1996, a metal serial number tag has been affixed to the fiberglass insert. If the unit does not have a serial number, or if there is any uncertainty regarding the size of the Stormceptor using depth measurements, please contact the Rinker Materials Stormceptor information line at (800) 909-7763 for assistance.

4. ***Stormceptor Maintenance Guidelines***

The performance of all storm water quality measures that rely on sedimentation decreases as they fill with sediment (See Table 2 for Stormceptor capacities). An estimate of performance loss can be made from the relationship between performance and storage volume. Rinker Materials recommends maintenance be performed when the sediment volume in the unit reaches 15% of the total storage. This recommendation is based on several factors:

- Sediment removal is easier when removed on a regular basis (as sediment builds up it compacts and solidifies making maintenance more difficult).
- Development of a routine maintenance interval helps ensure a regular maintenance schedule is followed. Although the frequency of maintenance will depend on site conditions, it is estimated that annual maintenance will be required for most applications; annual maintenance is a routine occurrence which is easy to plan for and remember.
- A minimal performance degradation due to sediment build-up can occur.

In the event of any hazardous material spill, Rinker Materials recommends maintenance be performed immediately. Maintenance should be performed by a licensed liquid waste hauler. You should also notify the appropriate regulatory agencies as required.

Table 2. Stormceptor Capacities			
Model	**Sediment Capacity ft³ (L)**	**Oil Capacity US gal (L)**	**Total Holding Capacity US gal (L)**
450*i*	45 (1276)	86 (326)	470 (1779)
900	75 (2135)	251 (950)	952 (3604)
1200	113 (3202)	251 (950)	1234 (4671)
1800	193 (5470)	251 (950)	1833 (6939)
2400	155 (4387)	840 (3180)	2462 (9320)
3600	323 (9134)	840 (3180)	3715 (14063)
4800	465 (13158)	909 (3441)	5059 (19150)
6000	609 (17235)	909 (3441)	6136 (23227)
7200	726 (20551)	1059 (4009)	7420 (28088)
11000*s*	942 (26687)	2797 (10588)*	11194 (42374)
13000*s*	1230 (34841)	2797 (10588)*	13348 (50528)
16000*s*	1470 (41632)	3055 (11564)*	15918 (60256)

** Total both structures combined*

4.1 *Recommended Maintenance Procedure*

For the "disc" design, oil is removed through the 6" inspection/cleanout pipe and sediment is removed through the 24" diameter outlet riser pipe. Alternatively, oil could be removed from the 24" opening if water is removed from the treatment chamber, lowering the oil level below the drop pipes.

The depth of sediment can be measured from the surface of the Stormceptor with a dipstick tube equipped with a ball valve (Sludge Judge®). It is recommended that maintenance be performed once the sediment depth exceeds the guideline values provided in Table 3 for the reasons noted in Section 4.0 Stormceptor Maintenance Guidelines.

Table 3. Sediment Depths Indicating Required Maintenance	
Model	**Sediment Depth***
450*i*	8" (200 mm)
900	8" (200 mm)
1200	10" (250 mm)
1800	15" (375 mm)
2400	12" (300 mm)
3600	17" (425 mm)
4800	15" (375 mm)
6000	18" (450 mm)
7200	15" (375 mm)
11000*s*	17" (425 mm)**
13000*s*	20" (500 mm)**
16000*s*	17" (425 mm)**

** Depths are approximate*

*** In each structure*

No entry into the unit is required for routine maintenance of the Inlet Stormceptor or the smaller disc insert models of the In-Line Stormceptor. Entry to the level of the disc insert may be required for servicing the larger disc insert models. Any potential obstructions at the inlet can be observed from the surface. The fiberglass insert has been designed as a platform for authorized maintenance personnel in the event that an obstruction needs to be removed.

Typically, maintenance is performed by the Vacuum Service Industry, a well established sector of the service industry that cleans underground tanks, sewers, and catch-basins. Costs to clean a Stormceptor will vary based on the size of the unit and transportation distances. If you need assistance for cleaning a Stormceptor unit, contact your local Rinker Materials representative, or the Stormceptor Information Line at (800) 909-7763.

Figures 1 and 2 will help illustrate the access point for routine maintenance of Stormceptor.

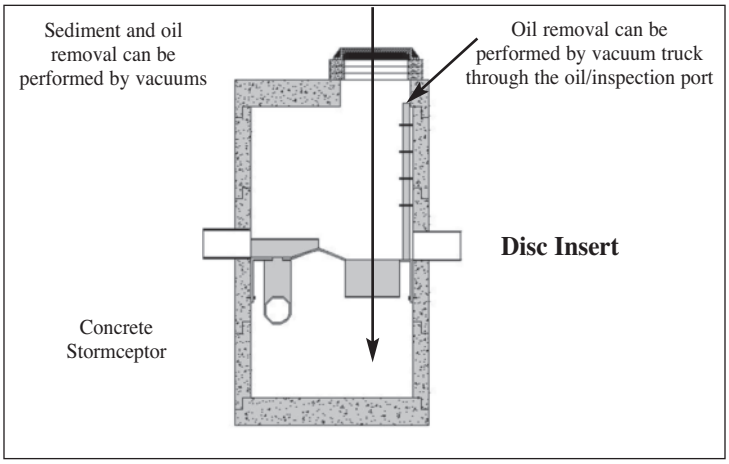

Figure 1 Single Inlet/Outlet "Disc" Insert
In-Line Stormceptor

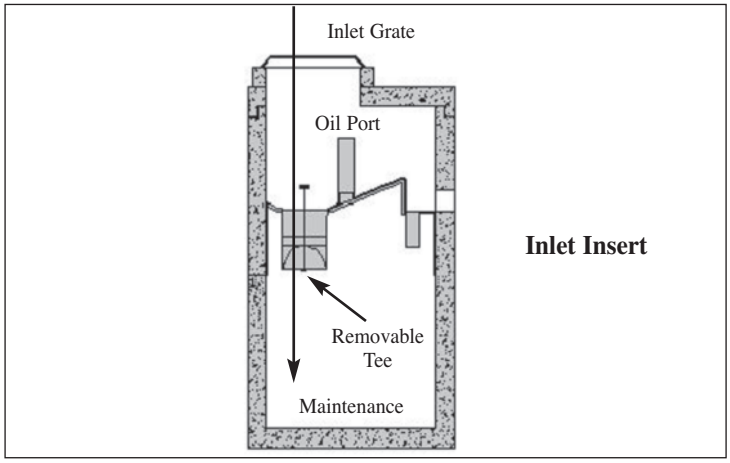

Figure 2 STC 450*i*
Inlet Stormceptor

4.2 *Disposal of Trapped Material from Stormceptor*

The requirements for the disposal of material from Stormceptor are similar to that of any other Best Management Practices (BMP). Local guidelines should be consulted prior to disposal of the separator contents.

In most areas the sediment, once dewatered, can be disposed of in a sanitary landfill. It is not anticipated that the sediment would be classified as hazardous waste. In some areas, mixing the water with the sediment will create a slurry that can be discharged into a trunk sanitary sewer. In all disposal options, approval from the disposal facility operator/agency is required. Petroleum waste products collected in Stormceptor (oil/chemical/fuel spills) should be removed by a licensed waste management company.

What if I see an oil rainbow or sheen at the Stormceptor outlet?

With a steady influx of water with high concentrations of oil, a sheen may be noticeable at the Stormceptor outlet. This may occur because a rainbow or sheen can be seen at very small oil concentrations (< 10 ppm). Stormceptor will remove over 95% of all free oil and the appearance of a sheen at the outlet with high influent oil concentrations does not mean that the unit is not working to this level of removal. In addition, if the influent oil is emulsified, the Stormceptor will not be able to remove it. The Stormceptor is designed for free oil removal and not emulsified or dissolved oil conditions.

5.0 *Recommended Safety Procedures*

Rinker Materials strongly recommends that any person who enters a Stormceptor System follow all applicable OSHA regulations for entry in permit required confined spaces, as outlined in 29 CFR 1910.146. A permit required confined space consists of a space that:

- Is large enough and so configured that an employee can bodily enter and perform assigned work.
- Has limited or restricted means for entry and exit.
- Is not designed for continuous employee occupancy.
- Contains or has one of the following:
  - a potential to contain a hazardous atmosphere.
  - a material that has the potential for engulfing an entrant.
  - any other recognized serious safety hazard.

Storm water and wastewater systems fall under OSHA guidelines for a permit required confined space. Failure to follow OSHA guidelines for entry and work in a permit required confined space can result in serious injury or death. Please exercise extreme caution and follow appropriate safety procedures when entering any confined space.

Two square pick holes in the cover vent the Stormceptor, allow for removal of the cover, and provide sampling ports for air quality monitoring before the cover is removed. If you must enter the Stormceptor, please note that if the disc insert inside is wet, it can be slippery.

Recognizing that every work site is different, the responsibility for safety falls on the contractor. The contractor must ensure that all employees and subcontractors follow established safety procedures and OSHA regulations for working in and around permit required confined spaces as well as for any other safety hazard that may be present on that particular site.

6.0 *Stormceptor Monitoring Protocol*

If monitoring of your Stormceptor System is required, we recommend you follow the procedures outlined below by the Rinker Materials Stormceptor office. If you have any questions regarding monitoring please contact the Rinker Materials Stormceptor Product Manager at (800) 909-7763.

6.1 *Pollutants to be Monitored*

Table 4 indicates the pollutants to be monitored during the storm events and the minimum acceptable detection limit for each pollutant to be analyzed. Approved federal or state laboratory analysis methodologies are to be used for the analysis.

The optional metals indicated in Table 4 refer to the Resource Conservation Recovery Act and may be covered by a generic metals scan. Bacteria monitoring will not be required unless explicitly requested elsewhere.

Two sediment samples are to be extracted from the monitored Stormceptor at the end of the study and analyzed for the particle size distribution and water content. A minimum of 8 U.S. sieve sizes should be used to determine the particle size distribution. Sieves that are used must include, but are not limited to 35, 60, 100, 140, 200, 270 and 400. Three clay particle sizes must be analyzed to denote particle sizes between 5 and 25 μm. The particle size distributions should be plotted on a standard grain size distribution graph.

Table 4. Monitoring Pollutants	
Pollutant	**Minimum Detection Limit (MDL)**
Total Suspended Solids (TSS)	5 mg/l
Total Phosphorus (P)	0.02 mg/l
Total Kjeldahl Nitrogen (TKN)	0.1 mg/l
Copper (Cu)	0.001 mg/l
Cadmium (Cd)	0.005 mg/l
Lead (Pb)	0.05 mg/l
Zinc (Zn)	0.01 mg/l
Chromium (Cr)	0.01 mg/l
Total Petroleum Hydrocarbons (TPH)	1 mg/l
Conductivity	0.1 μmho/cm
Fecal Coliform*	1/100 ml
Additional Metals (optional)	
Arsenic (As)	0.005 mg/l
Barium (Ba)	0.01 mg/l
Mercury (Hg)	0.0005 mg/l
Selenium (Se)	0.005 mg/l
Silver (Ag)	0.01 mg/l

* Only if explicitly requested in Terms of Reference

6.2 *Monitoring Methodology*

The following monitoring protocol should be followed to ensure reasonable monitoring results and interpretation:

- Monitoring protocols should conform to **EPA 40 CFR Part 136.**
- The **EPA guideline of 72 hours dry period** prior to a monitoring event should be used. This will ensure that there is sufficient pollutant build-up available for wash-off during the monitored event.
- Flow proportional monitoring must be conducted for the parameters indicated in Table 1. Samples should be analyzed separately for the first flush versus the remainder of the storm event. Monitoring need not extend longer than an 8-hour period after the start of the storm event (composite).
- **Sediment sampling** (measuring the sediment depth in the unit at the beginning and end of the monitoring period) must be conducted. The water content of the sediment layer must be analyzed to determine the dry volume of suspended solids. Sediment depth sampling will indicate the rate of pollution accumulation in the unit, provide confirmation that the unit is not scouring and confirm the flow proportional monitoring results. A mass balance using the sediment sampling should be calculated to validate the flow proportional sampling.

- **Grab sampling** (just taking samples at the inlet and outlet) is an unacceptable methodology for testing the performance of the Stormceptor during wet weather conditions unless it is flow weighted (flow weighted composite sample from numerous grab samples) over the entire storm.
- The oil containment area underneath the insert should be inspected via the vent pipe for dry weather spills capture once a month during the monitoring period since the flow rate of a dry weather spill may not trigger the automated samplers.
- A tipping bucket rain gauge should be installed on-site to record the distribution of storm intensities and rainfall volume during the monitored events.
- Results that are within the laboratory error (both inlet and outlet) or are representative of relatively clean water should be discarded. Typical concentrations of pollutants in storm water are:

TSS	100 mg/L
Total P	0.33 mg/L
TKN	1.50 mg/L
Total Cu	34 μg/L
Total Pb	144 μg/L
Total Zn	160 μg/L

A threshold first flush/composite TSS value of 50 mg/L at the inlet to the Stormceptor should be used as the lower limit of an acceptable storm for reporting event efficiency. Monitoring results where the influent TSS concentration is less than 50 mg/L should only be used in mass load removal calculations over the entire monitoring period with other storms where the influent concentration is greater than 50 mg/L. The results should not be analyzed if the influent TSS concentrations during all monitored storms are less than 50 mg/L. Storms where the influent TSS concentration is less than 10 mg/L should be discarded from all analyses.

- A threshold storm event volume equal to 1.5 times the storage volume of the Stormceptor being monitored should be used as the lower limit of an acceptable storm for monitoring.
- Sampling at the outlet of the Stormceptor should be conducted within the 24" outlet riser pipe to accurately define event performance.
- The personnel monitoring the Stormceptor should record incidental information in a log file. Information such as weather, site conditions, inspection and maintenance information, monitoring equipment failure, etc. provide valuable information that can explain anomalous results.
- Laboratory results of monitored samples should be analyzed within 10 days of being submitted to the lab.
- Weekly inspections of the sampling tubes, flow meter, rain gauge, and quality samplers should be conducted to ensure proper operation of the monitoring equipment. Debris and sediment that collects around the sampling intakes should be cleaned after each event.
- During the installation of automated quality samplers, care should be exercised to ensure that representative samples will be extracted (placement of intakes, ensuring that tubing is not constricted or crimped).
- Sampling should be conducted for a minimum of 6 storms. Ideally 15 storms should be sampled if the budget allows.

Call the Stormceptor Information Line (800-909-7763) for more detailed information and test results.

TECHNICAL INFORMATION:

- Stormceptor CD ROM
- Stormceptor Technical Manual
- Stormceptor Installation Guide
- Stormceptor Brochure

TEST RESULTS:

- STEP Report (Independent Verification)
- University of Coventry Study
- ETV Canada (Federal Verification)
- National Water Research Institute Test
- Westwood, MA Field Monitoring Study
- Edmonton, Canada Field Monitoring Study
- Seattle Field Monitoring
- Como Park, MN Field Monitoring Study
- Florida Atlantic University Submerged Stormceptor Testing
- Oil Removal Field Validation
- Sludge Analyses and Particle Size Analyses

Rinker MATERIALS™

6560 Langfield Rd., Bldg. 3
Houston, TX 77092
Phone: 832-590-5300
Fax: 832-590-5399
Toll Free: 800-909-7763
www.rinkerstormceptor.com

©2006 Rinker Materials Corp.

Rev. 3/2006

Grassed Channel (Biofilter Swale)

Description: Grassed Channels (formerly known as Biofilter swales) are treatment systems with a longer hydraulic residence time than drainage channels. The removal mechanisms are sedimentation and gravity separation, rather than filtration. To receive TSS credit, a sediment forebay or equivalent must be provided for pretreatment. Note that the sediment forebay does not receive a separate TSS removal credit.

Ability to meet specific standards

Standard	Description
2 - Peak Flow	N/A
3 - Recharge	No infiltration credit
4 - TSS Removal	50% TSS with adequate pretreatment
5 - Higher Pollutant Loading	N/A
6 - Discharges near or to Critical Areas	Not suitable for vernal pools or bathing beaches. At other critical areas, may be used as a pretreatment device.
7 - Redevelopment	Typically not suited for retrofits.

Advantages/Benefits:

- Provides pretreatment if used as the first part of a treatment train.
- Open drainage system aids maintenance
- Accepts sheet or pipe flow
- Compatible with LID design measures.
- Little or no entrapment hazard for amphibians or other small animals

Disadvantages/Limitations:

- Short retention time does not allow for full gravity separation·
- Limited biofiltration provided by grass lining.· Cannot alone achieve 80% TSS removal
- Must be designed carefully to achieve low flow rates for Water Quality Volume purposes (<1.0 fps)
- Mosquito control considerations

Pollutant Removal Efficiencies

• Total Suspended Solids (TSS)	50%[1] for Regulatory Purposes (47%)[2]
• Total phosphorus (TP)	-121%[2]
• Total Nitrogen	Insufficient Data
• Metals (copper, lead, zinc, cadmium)	Insufficient Data
• Pathogens (coliform, e. coli)	Insufficient Data

[1] Atlanta Regional Commission et al, 2001, Georgia Stormwater Manual, Volume 2, Section 3-3-2, http://georgiastormwater.com/vol2/3-3-2.pdf

[2] International Stormwater Database, based on MassDEP analysis of raw influent & effluent values reported in 2005.

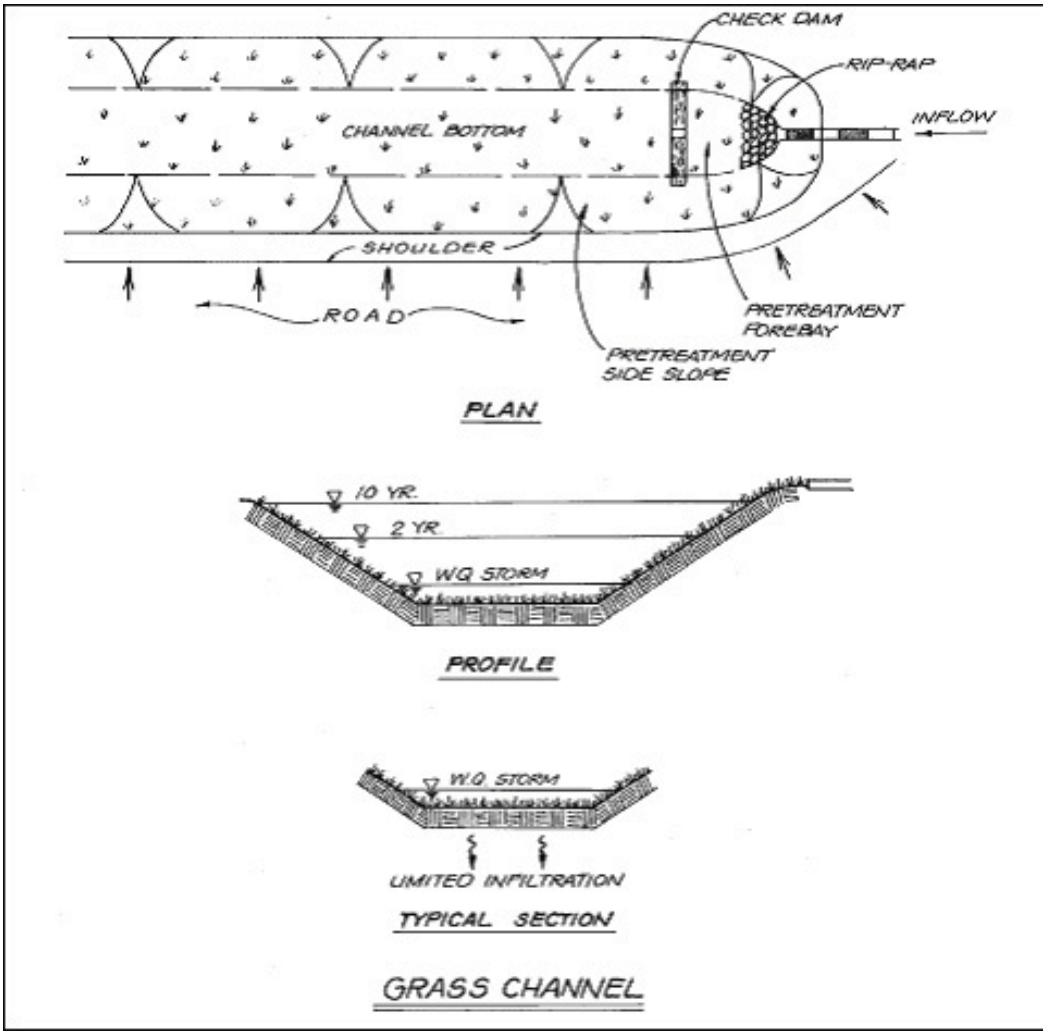

adapted from the Vermont Stormwater Manual

Maintenance

Activity	Frequency
Remove sediment from forebay	Annually
Remove sediment from grass channel	Annually
Mow	Once a month during growing season
Repair areas of erosion and revegetate	As needed, but no less than once a year

Special Features

Reduces volume and rate of runoff.

Grass Channels

Grass channels convey and treat stormwater. Grass channels were referred to as biofilter swales in the 1996 MassDEP/CZM Stormwater Handbook, based on the nomenclature coined by the Center for Watershed Protection (CWP). The CWP is now referring to biofilter swales as grass channels – so MassDEP is adopting the same name as the CWP to minimize confusion.

Properly designed grass channels are ideal when used adjacent to roadways or parking lots, where runoff from the impervious surfaces can be directed to the channel via sheet flow. Runoff can also be piped to the channel. If piped, locate the sediment forebay at the pipe outlet and include a check dam separating the forebay from the channel. For sheet flow, use a vegetated filter strip on a gentle slope or a pea gravel diaphragm. Make the longitudinal slope as flat as possible. This increases the Hydraulic Residence Time (HRT) and allows gravity separation of solids and maximizes sediment removal. Install check dams to further increase the HRT.

Review of the International Stormwater Database, updated in 2005, indicates lower TSS removal when compared to similar treatment practices (dry water quality swales, wet water quality swales, and bioretention areas). The information in the International Stormwater Database indicates grass channels are likely to export phosphorus (hence the negative removal efficiency cited above). Grass channels are not a practice suitable for treating stormwater that discharges to waters impaired by phosphorus or for waters where phosphorus TMDLs have been established.

Differences from dry water quality swales, wet water quality swales, bioretention cells, and drainage channels: Dry water quality swales contain a specific soil media mix and underdrain, providing greater treatment than grass channels. Wet water quality swales are designed with a permanent wet channel, whereas grass channels must be designed to completely drain between storms. Bioretention areas, including rain gardens, are designed solely as a treatment practice, and not for conveyance. Lastly, drainage channels act solely as a conveyance, in contrast to properly designed grass channels where runoff flow is deliberately lagged to provide treatment.

Design Considerations

Sizing:

Water Quality Volume: Design grass channels to maximize contact with vegetation and soil surface to promote greater gravity separation of solids during the storm associated with the water quality event (either ½ inch or 1-inch runoff). Design the channel such that the velocity does not exceed 1 foot per second during the 24-hour storm associated with the water quality event. Do not allow the water depth during the storm associated with the water quality event to exceed 4 inches (for design purposes). Make sure the selected design storm provides at least 9 minutes of HRT within the channel. Increasing the HRT beyond 9 minutes increases the likelihood of achieving the 50% TSS removal efficiency. Adding meanders to the swale increases its length and may increase the HRT.

2-year and 10-year conveyance capacity: Design grass channels to convey both the 2-year and 10-year 24-hour storms. Provide a minimum of 1-foot freeboard above the 10-year storm. Make sure that the runoff velocities during the 2-year 24-hour storm do not cause erosion problems.

Channel Length: Length depends on design factors to achieve the minimum 9-minute residence time for the storm associated with the water quality event.

Channel Crossings: In residential settings, driveways will cross over the channel, typically via culverts (pre-cast concrete, PVC, or corrugated metal pipe).

Soils: Grass channels may be constructed from most parent soils, unless the soils are highly impermeable. Soils must be able to support a dense grass growth. MassDEP recommends sandy loams, with an organic content of 10 to 20%, and no more than 20% clay. Highly impermeable soils, such as clays, are not suitable for grass channels, because they do not support dense grass stands. Similarly, gravelly and coarse soils may not be suitable due to their lower moisture retention capability, leading to potential die-back of the grass lining during the summer when the inter-event period between storms is longer than during other times of the year.

Grasses: The grasses serve to stabilize the channel, and promote conditions suitable for sedimentation, such as offering resistance to flow, which reduces water velocities and turbulence. Select a grass height of 6 inches or less. Grasses over that height tend to flatten when water flows

over them, inhibiting sedimentation. Select grasses that produce a fine, uniform and dense cover that can withstand varying moisture conditions. Regularly mow the channel to ensure that the grass height does not exceed 6 inches. Select grasses that are salt tolerant to withstand winter deicing of roadways. In the spring, replant any areas where grasses died off due to deicing. (Franklin 2002 and Knoxville 2003 provide recommendations for the best grass species.)
Pea Gravel Diaphragm: Use clean bank-run gravel, conforming to ASTM D 448, varying in size from 1/8 inch to 3/8 inch (No. 6 stone).
Outlet Protection: Must be used at discharge points to prevent scour downstream of the outlet.
Construction Considerations: Stabilize the channel after it is shaped before permanent turf is established, using natural or synthetic blankets. Never allow grass channels to receive construction period runoff.

Site Constraints

A proponent may not be able to install a grass channel swale because of:

- High groundwater;
- Presence of utilities; or
- Other site conditions that limit depth of excavation because of stability.

Maintenance

Access: Maintenance access must be designed as part of the grass channel. If located adjacent to a roadway, make the maintenance access at least 15 feet wide, which can also be combined with a breakdown lane along a highway or on-street parking along a residential street. When combined with on-street parking, post signs prohibiting parking when the swale is to be inspected and cleaned. Do not use travel lanes along highways and streets as the required maintenance access.
Mowing: Set the mower blades no lower than 3 to 4 inches above the ground. Do not mow beneath the depth of the design flow during the storm associated with the water quality event (e.g., if the design flow is no more than 4 inches, do not cut the grass shorter than 4 inches). Mow on an as-needed basis during the growing season so that the grass height does not exceed 6 inches.
Inspection: Inspect semi-annually the first year, and at least once a year thereafter. Inspect the grass for growth and the side slopes for signs of erosion and formation of rills and gullies. Plant an alternative grass species if the original grass cover is not successfully established. If grass growth is impaired by winter road salt or other deicer use, re-establish the grass in the spring.
Trash/Debris Removal: Remove accumulated trash and debris prior to mowing.
Sediment Removal: Check on a yearly basis and clean as needed. Use hand methods (i.e., a person with a shovel) when cleaning to minimize disturbance to vegetation and underlying soils. Sediment build-up in the grass channel reduces its capacity to treat and convey the water quality event, 2-year and 10-year 24-hour storm.

References:

Atlanta Regional Commission et al, 2001, Georgia Stormwater Management Manual, Volume 2, Section 3-3-2, Grass Channel, http://georgiastormwater.com/vol2/3-3-2.pdf

Center for Watershed Protection, undated, Stormwater Management Fact Sheet: Grass Channel, http://www.stormwatercenter.net/Assorted%20Fact%20Sheets/Tool6_Stormwater_Practices/Open%20Channel%20Practice/Grassed%20Channel.htm (accessed October 23, 2007)

Shanti R. Colwell, Richard R. Horner, Derek B. Booth, 2000, Characterization of Performance Predictors and Evaluation of Mowing Practices in Biofiltration Swales, http://depts.washington.edu/cwws/Research/Reports/swale%20mowing.pdf

Franklin, City of, 2002, PTP-05, Biofilters: Swales and Strips, http://www.franklin-gov.com/engineering/STORMWATER/bmp/ptp/ptp-05.pdf

Idaho Department of Environmental Quality, 2005, Storm Water Best Management Practices Catalog, BMP 1, Biofiltration Swale (Vegetated Swale).

International Stormwater BMP Data Base, 2005

Knoxville, City of, 2003, ST-05, Filter Strips and Swales, http://www.ci.knoxville.tn.us/engineering/bmp_manual/ST-05.pdf

Minton, G., 2002, Stormwater Treatment, Resource Planning Associates, Seattle, WA, p. 174

Bioretention Areas & Rain Gardens

Description: Bioretention is a technique that uses soils, plants, and microbes to treat stormwater before it is infiltrated and/or discharged. Bioretention cells (also called rain gardens in residential applications) are shallow depressions filled with sandy soil topped with a thick layer of mulch and planted with dense native vegetation. Stormwater runoff is directed into the cell via piped or sheet flow. The runoff percolates through the soil media that acts as a filter.

There are two types of bioretention cells: those that are designed solely as an organic filter filtering bioretention areas and those configured to recharge groundwater in addition to acting as a filter exfiltrating bioretention areas. A filtering bioretention area includes an impermeable liner and underdrain that intercepts the runoff before it reaches the water table so that it may be conveyed to a discharge outlet, other best management practices, or the municipal storm drain system. An exfiltrating bioretention area has an underdrain that is designed to enhance exfiltration of runoff into the groundwater.

Ability to meet specific standards

Standard	Description
2 - Peak Flow	N/A
3 - Recharge	An exfiltrating bioretention area provides groundwater recharge.
4 - TSS Removal	90% TSS removal credit with adequate pretreatment
5 - Higher Pollutant Loading	Can be used for certain land uses with higher potential pollutant loads if lined and sealed until adequate pretreatment is provided. Adequate pretreatment must include 44% TSS removal prior to infiltration. For land uses that have the potential to generate runoff with high concentrations of oil and grease such as high intensity use parking lots and gas stations, adequate pretreatment may also include an oil grit separator, sand filter or equivalent. In lieu of an oil grit separator or sand filter, a filtering bioretention area also may be used as a pretreatment device for infiltration practices exfiltrating runoff from land uses with a potential to generate runoff with high concentrations of oil and grease.
6 - Discharges near or to Critical Areas	Good option for discharges near cold-water fisheries. Should not be used near bathing beaches and shellfish growing areas.
7 - Redevelopment	Suitable with appropriate pretreatment

Pollutant Removal Efficiencies

- Total Suspended Solids (TSS) — 90% with vegetated filter strip or equivalent
- Total Nitrogen — 30% to 50% if soil media at least 30 inches
- Total Phosphorus — 30% to 90%
- Metals (copper, lead, zinc, cadmium) — 40% to 90%
- Pathogens (coliform, e coli) — Insufficient data

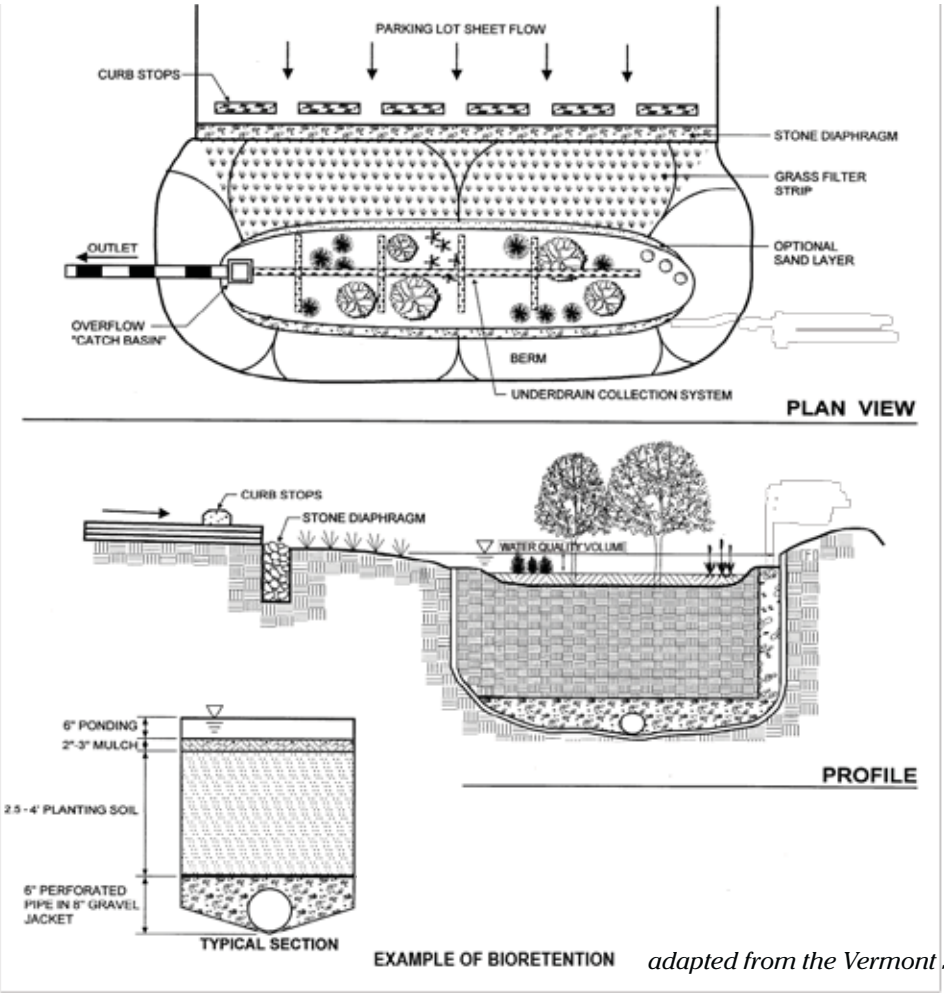

EXAMPLE OF BIORETENTION *adapted from the Vermont Stormwater Manual*

Special Features:

- Can be lined and sealed to prevent recharge where appropriate
- Adequate pretreatment is essential
- Not recommended in areas with steep slope
- Depth of soil media depends on type of vegetation that is proposed
- Soil media must be 30 inches deep to achieve removal of nitrogen

Advantages/Benefits:

- Can be designed to provide groundwater recharge and preserves the natural water balance of the site
- Can be designed to prevent recharge where appropriate
- Supplies shade, absorbs noise, and provides windbreaks
- Can remove other pollutants besides TSS including phosphorus, nitrogen and metals
- Can be used as a stormwater retrofit by modifying existing landscape or if a parking lot is being resurfaced
- Can be used on small lots with space constraints
- Small rain gardens are mosquito death traps
- Little or no hazard for amphibians or other small animals

Disadvantages/Limitations:

- Requires careful landscaping and maintenance
- Not suitable for large drainage areas

Maintenance

Activity	Frequency
Inspect and remove trash	Monthly
Mow	2 to 12 times per year
Mulch	Annually
Fertilize	Annually
Remove dead vegetation	Annually
Prune	Annually

Bioretention Areas & Rain Gardens

Not all bioretention cells are designed to exfiltrate. Only the infiltration requirements are applicable to bioretention cells intended to exfiltrate.

Applicability

Bioretention areas can provide excellent pollutant removal for the "first flush" of stormwater runoff. Properly designed and maintained cells remove suspended solids, metals, and nutrients, and can infiltrate an inch or more of rainfall. Distributed around a property, vegetated bioretention areas can enhance site aesthetics. In residential developments they are often described as "rain gardens" and marketed as property amenities. Routine maintenance is simple and can be handled by homeowners or conventional landscaping companies, with proper direction.

Bioretention systems can be applied to a wide range of commercial, residential, and industrial developments in many geologic conditions; they work well on small sites and on large sites divided into multiple small drainage areas. Bioretention systems are often well suited for ultra-urban settings where little pervious area exists. Although they require significant space (approximately 5% to 7% of the area that drains to them), they can be integrated into parking lots, parking lot islands, median strips, and traffic islands. Sites can be retrofitted with bioretention areas by replacing existing parking lot islands or by re-configuring a parking lot during resurfacing. On residential sites, they are commonly used for rooftop and driveway runoff.

Effectiveness

Bioretention areas remove pollutants through filtration, microbe activity, and uptake by plants; contact with soil and roots provides water quality treatment better than conventional infiltration structures. Studies indicate that bioretention areas can remove from 80% to 90% of TSS. If properly designed and installed, bioretention areas remove phosphorus, nitrogen, metals, organics, and bacteria to varying degrees.

Bioretention areas help reduce stress in watersheds that experience severe low flows due to excessive impervious cover. Low-tech, decentralized bioretention areas are also less costly to design, install, and maintain than conventional stormwater technologies that treat runoff at the end of the pipe. Decentralized bioretention cells can also reduce the size of storm drain pipes, a major component of stormwater treatment costs. Bioretention areas enhance the landscape in a variety of ways: they improve the appearance of developed sites, provide windbreaks, absorb noise, provide wildlife habitat, and reduce the urban heat island effect.

Planning Considerations

Filtering bioretention areas are designed with an impermeable liner and underdrain so that the stormwater may be transported to additional BMPs for treatment and/or discharge. Exfiltrating bioretention areas are designed so that following treatment by the bioretention area the stormwater may recharge the groundwater.

Both types of bioretention areas may be used to treat runoff from land uses with higher potential pollutant loads. However, exfiltrating bioretention areas may be used to treat runoff from land uses with higher potential pollutant loads, only if pretreatment has been provided to achieve TSS removal of at least 44%. If the land use has the potential to generate runoff with high concentrations of oil and grease, other types of pretreatment, i.e., a deep sump catch basin and oil grit separator or a sand filter, is required prior to discharge of runoff to an exfiltrating bioretention area. A filtering bioretention area may also be used as a pretreatment device for an exfiltrating bioretention area or other infiltration practice that exfiltrates runoff from land uses with a potential to generate runoff with high concentrations of oil and grease.

To receive 90% TSS removal credit, adequate pretreatment must be provided. If the flow is piped to the bioretention area a deep sump catch catch basin and sediment forebay should be used to provide pretreatment. For sheet flow, there are a number or pretreatment options. These options include:

- A vegetated filter strip, grass channel or water quality swale designed in accordance with the specifications set forth in Chapter 2.
- A grass and gravel combination. This should consist of at least 8 inches of gravel followed by 3 to 5 feet of sod. (source: North Carolina Stormwater Manual, 2007, http://h2o.enr.state.nc.us/su/documents/Ch12-Bioretention_001.pdf)
- Pea diaphragm combined with a vegetated filter strip specially designed to provide pretreatment for a bioretention area as set forth in the following table. (source: Georgia Stormwater Manual and Claytor and Schuler 1996)

Dimensions for Filter Strip Designed Specially to Provide Pretreatment for Bioretention Area

Parameter	Impervious Area				Pervious Areas (lawns, etc.)			
Maximum inflow approach length (feet)	35		75		75		100	
Filter strip slope (max=6%)	<2%	>2%	<2%	>2%	<2%	>2%	<2%	>2%
Filter strip minimum length (feet)	10	15	20	25	10	12	15	18

Bioretention areas must not be located on slopes greater than 20%. When the bioretention area is designed to exfiltrate, the design must ensure vertical separation of at least 2 feet from the seasonal high groundwater table to the bottom of the bioretention cell.

For residential rain gardens, pick a low spot on the property, and route water from a downspout or sump pump into it. It is best to choose a location with full sun, but if that is not possible, make sure it gets at least a half-day of sunlight.

Do not excavate an extensive rain garden under large trees. Digging up shallow feeder roots can weaken or kill a tree. If the tree is not a species that prefers moisture, the additional groundwater could damage it. Size the bioretention area using the methodology set forth in Volume 3.

Design

Size the bioretention area to be 5% to 7% of the area draining to it. Determine the infiltrative capacity of the underlying native soil by performing a soil evaluation in accordance with Volume 3. Do not use a standard septic system (i.e., Title 5) percolation test to determine soil permeability.

The depth of the soil media must be between 2 and 4 feet. This range reflects the fact that most of the pollutant removal occurs within the first 2 feet of soil and that excavations deeper than 4 feet become expensive. The depth selected should accommodate the vegetation. If the minimum depth is used, only shallow rooted plants and grasses my be used. If there is a Total Maximum Daily Load that requires nitrogen to be removed from the stormwater dischrges, the bioretention area should have a soil media with a depth of at least 30 inches, because nitrogen removal takes place 30 inches below the ground surface. If trees and shrubs are to be planted, the soil media should be at least 3 feet.

Size the cells (based on void space and ponding area) at a minimum to capture and treat the required water quality volume (the first 0.5 inch or 1 inch of runoff) if intended to be used for water quality treatment (Stormwater Standard No. 4), the required recharge volume if used for recharge (Stormwater Standard No. 3), or the larger of the two volumes if used to achieve compliance with both Stormwater Standards 3 and 4.

Cover the bottom of the excavation with coarse gravel, over pea gravel, over sand. Earlier designs used filter fabric as a bottom blanket, but more recent experiences show that filter fabric is prone to clogging. Consequently, do not use fabric filters or sand curtains. Use the Engineered Soil Mix below.

Engineered Soil Mix for Bioretention Systems Designed to Exfiltrate

- The soil mix for bioretention areas should be a mixture of sand compost and soil.
  - o 40 % sand,
  - o 20-30% topsoil, and
  - o 30-40% compost.

- The soil mix must be uniform, free of stones, stumps, roots or similar objects larger than 2 inches. Clay content should not exceed 5%.
- Soil pH should generally be between 5.5-6.5, a range that is optimal for microbial activity and adsorption of nitrogen, phosphorus, and other pollutants.
- Use soils with 1.5% to 3% organic content and maximum 500-ppm soluble salts.
- The sand component should be gravelly sand that meets ASTM D 422.

Sieve Size	Percent Passing
2-inch	100
¾-inch	70-100
¼-inch	50-80
U.S. No. 40	15-40
U.S. No. 200	0-3

- The topsoil component shall be a sandy loam, loamy sand or loam texture.
- The compost component must be processed from yard waste in accordance with MassDEP Guidelines (see http://www.mass.gov/dep/recycle/reduce/leafguid.doc). The compost shall not contain biosolids.

On-site soil mixing or placement is not allowed if soil is saturated or subject to water within 48 hours. Cover and store soil to prevent wetting or saturation.

Test soil for fertility and micro-nutrients and, only if necessary, amend mixture to create optimum conditions for plant establishment and early growth.

Grade the area to allow a ponding depth of 6 to 8 inches; depending on site conditions, more or less ponding may be appropriate.

Cover the soil with 2 to 3 inches of fine-shredded hardwood mulch.

The planting plan shall include a mix of herbaceous perennials, shrubs, and (if conditions permit) understory trees that can tolerate intermittent ponding, occasional saline conditions due to road salt, and extended dry periods. A list of plants that are suitable for bioretention areas can be found at the end of this section. To avoid a monoculture, it is a good practice to include one tree or shrub per 50 square feet of bioretention area, and at least 3 species each of herbaceous perennials and shrubs. Invasive and exotic species are prohibited. The planting plan should also meet any applicable local landscaping requirements.

All exfiltrating bioretention areas must be designed to drain within 72 hours. However, rain gardens are typically designed to drain water within a day and are thus unlikely to breed mosquitoes.

Bioretention cells, including rain gardens, require pretreatment, such as a vegetated filter strip. A stone or pea gravel diaphragm or, even better, a concrete level spreader upstream of a filter strip will enhance sheet flow and sediment removal.
Bioretention cells can be dosed with sheet flow, a surface inlet, or pipe flow. When using a surface inlet, first direct the flow to a sediment forebay. Alternatively, piped flow may be introduced to the bioretention system via an underdrain.

For bioretention cells dosed via sheet flow or surface inlets, include a ponding area to allow water to pond and be stored temporarily while stormwater is exfiltrating through the cell. Where bioretention areas are adjacent to parking areas, allow three inches of freeboard above the ponding depth to prevent flooding.

Most bioretention cells have an overflow drain that allows ponded water above the selected ponding depth to be dosed to an underdrain. If the bioretention system is designed to exfiltrate, the underdrain is not connected to an outlet, but instead terminates in the bioretention cell. If the bioretention area is not designed to exfiltrate, the underdrain is connected to an outlet for discharge or conveyance to additional best management practices.

Construction

During construction, avoid excessively compacting soils around the bioretention areas and accumulating silt around the drain field. To minimize sediment loading in the treatment area, direct runoff to the bioretention area only from areas that are stabilized; always divert construction runoff elsewhere.

To avoid compaction of the parent material, work from the edge of the area proposed as the location of an exfiltrationg bioretention cell. Never direct runoff to the cell until the cell and the contributing drainage areas are fully stabilized.

Place planting soils in 1-foot to 2-foot lifts and compact them with minimal pressure until the desired elevation is reached. Some engineers suggest flooding the cell between each lift placement in lieu of compaction.

Maintenance

Premature failure of bioretention areas is a significant issue caused by lack of regular maintenance. Ensuring long-term maintenance involves sustained public education and deed restrictions or covenants for privately owned cells. Bioretention areas require careful attention while plants are being established

Bioretention Maintenance Schedule

Activity	*Time of Year*	*Frequency*
Inspect & remove trash	Year round	Monthly
Mulch	Spring	Annually
Remove dead vegetation	Fall or Spring	Annually
Replace dead vegetation	Spring	Annually
Prune	Spring or Fall	Annually
Replace entire media & all vegetation	Late Spring/early Summer	As needed*

** Paying careful attention to pretreatment and operation & maintenance can extend the life of the soil media*

and seasonal landscaping maintenance thereafter.

In many cases, a landscaping contractor working elsewhere on the site can complete maintenance tasks. Inspect pretreatment devices and bioretention cells regularly for sediment build-up, structural damage, and standing water.

Inspect soil and repair eroded areas monthly. Re-mulch void areas as needed. Remove litter and debris monthly. Treat diseased vegetation as needed. Remove and replace dead vegetation twice per year (spring and fall).

Proper selection of plant species and support during establishment of vegetation should minimize—if not eliminate—the need for fertilizers and pesticides. Remove invasive species as needed to prevent these species from spreading into the bioretention area. Replace mulch every two years, in the early spring. Upon failure, excavate bioretention area, scarify bottom and sides, replace filter fabric and soil, replant, and mulch. A summary of maintenance activities can be found on the previous page.

Because the soil medium filters contaminants from runoff, the cation exchange capacity of the soil media will eventually be exhausted. When the cation exchange capacity of the soil media decreases, change the soil media to prevent contaminants from migrating to the groundwater, or from being discharged via an underdrain outlet. Using small shrubs and plants instead of larger trees will make it easier to replace the media with clean material when needed.

Plant maintenance is critical. Concentrated salts in roadway runoff may kill plants, necessitating removal of dead vegetation each spring and replanting. The operation and maintenance plan must include measures to make sure the plants are maintained. This is particularly true in residential subdivisions, where the operation and maintenance plan may assign each homeowner the legal responsibility to maintain a bioretention cell or rain garden on his or her property. Including the requirement in the property deed for new subdivisions may alert residential property owners to their legal responsibilities regarding the bioretention cells constructed on their lot.

Cold Climate Considerations

Never store snow in bioretention areas. The Operation and Maintenance plan must specify where on-site snow will be stored. All snow dumps must comply with MassDEP's guidance. When bioretention areas are located along roads, care must be taken during plowing operations to prevent snow from being plowed into the bioretention areas. If snow is plowed into the cells, runoff may bypass the cell and drain into downgradient wetlands without first receiving the required water quality treatment, and without recharging the groundwater.

References

Center for Watershed Protection, 2000, Bioretention as a Water Quality Best Management Practice, Article 110 from Watershed Protection Techniques; http://www.cwp.org/Downloads/ELC_PWP110.pdf
Federal Highway Administration , YEAR, Bioretention Fact Sheet, http://www.fhwa.dot.gov/environment/

Low Impact Development Center, 2003, Drainage – Bioretention Specification, http://www.lowimpactdevelopment.org/epa03/biospec.htm

Prince Georges County, 2002, Bioretention Manual, http://www.goprincegeorgescounty.com/der/bioretention.asp

Puget Sound Action Team, 2005, Low Impact Development, Pp. 174 - 184 http://www.psat.wa.gov/Publications/LID_tech_manual05/LID_manual2005.pdf

U.S. Environmental Protection Agency, 1999, Stormwater Technology Fact Sheet, Bioretention, EPA 832-F-99-012, http://www.epa.gov/owm/mtb/biortn.pdf

U.S. Environmental Protection Agency, 2005, National Management Measures to Control Nonpoint Source Pollution from Urban Areas, Publication Number EPA 841-B-05-004, Pp. 5-29 http://www.epa.gov/nps/urbanmm/

University of North Carolina, www.bae.ncsu.edu/topic/bioretention
www.bae.ncsu.edu/stormwater/PublicationFiles/DesigningRainGardens2001.pdf

Subsurface Structures

Description: Subsurface structures are underground systems that capture runoff, and gradually infiltrate it into the groundwater through rock and gravel. There are a number of underground infiltration systems that can be installed to enhance groundwater recharge. The most common types include pre-cast concrete or plastic pits, chambers (manufactured pipes), perforated pipes, and galleys.

Ability to meet specific standards

Standard	Description
2 - Peak Flow	N/A
3 - Recharge	Provides groundwater recharge
4 - TSS Removal	80%
5 - Higher Pollutant Loading	May be used if 44% of TSS is removed with a pretreatment BMP prior to infiltration. Land uses with the potential to generate runoff with high concentrations of oil and grease require an oil grit separator or equivalent prior to discharge to the infiltration structure. Infiltration must be done in accordance with 314 CMR 5.00.
6 - Discharges near or to Critical Areas	Highly recommended
7 - Redevelopment	Suitable with pretreatment

Advantages/Benefits:

- Provides groundwater recharge
- Reduces downstream flooding
- Preserves the natural water balance of the site
- Can remove other pollutants besides TSS
- Can be installed on properties with limited space
- Useful in stormwater retrofit applications

Disadvantages/Limitations:

- Limited data on field performance
- Susceptible to clogging by sediment
- Potential for mosquito breeding due to standing water if system fails

Pollutant Removal Efficiencies

- Total Suspended Solids (TSS) — 80%
- Nutrients (Nitrogen, phosphorus) — Insufficient data
- Metals (copper, lead, zinc, cadmium) — Insufficient data
- Pathogens (coliform, e coli) — Insufficient data

Subsurface Structures

There are different types of subsurface structures:

Infiltration Pit: A pre-cast concrete or plastic barrel with uniform perforations. The bottom of the pit should be closed with the lowest row of perforations at least 6 inches above the bottom, to serve as a sump. Infiltration pits typically include an observation well. The pits may be placed linearly, so that as the infiltrative surfaces in the first pit clog, the overflow moves to the second pit for exfiltration. Place an outlet near the top of the infiltration pit to accommodate emergency overflows. MassDEP provides recharge credit for storage below the emergency outflow invert. To make an infiltration pit, excavate the pit, wrap fabric around the barrel, place stone in the bottom of the pit, place the barrel in the pit, and then backfill stone around the barrel. Take a boring or dig an observation trench at the site of each proposed pit.

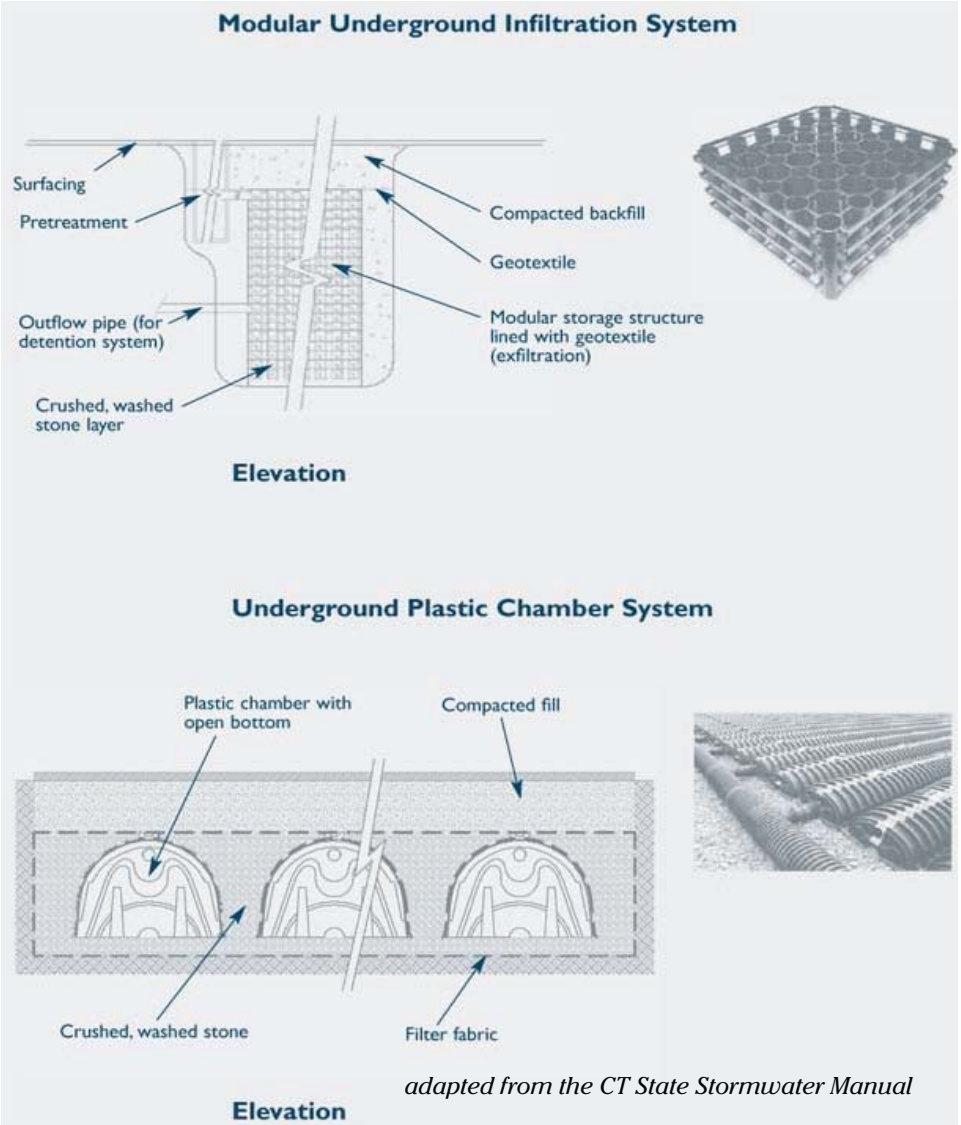

adapted from the CT State Stormwater Manual

Chambers: These are typically manufactured pipes containing open bottoms and sometimes perforations. The chambers are placed atop a stone bed. Take the same number of borings or observation pits as for infiltration trenches. Do not confuse these systems with underground detention systems (UDS) that use similar chambers. UDS are designed to attenuate peak rates of runoff--not to recharge groundwater.

Perforated Pipes: In this system, pipes containing perforations are placed in a leaching bed, similar to a Title 5 soil absorption system (SAS). The pipes dose the leaching bed. Take the same number of borings or observation pits as for infiltration trenches. Perforated pipes by themselves do not constitute a stormwater recharge system and receive no credit pursuant to Stormwater Standard No. 3. Do not confuse recharge systems that use perforated pipes with perforated pipes installed to lower the water table or divert groundwater flows.

Galleys: Similar to infiltration pits. Some designs consist of concrete perforated rectangular vaults. Others are modular systems usually placed under parking lots. When the galley design consists of a single rectangular perforated vault, conduct one boring or observation trench per galley. When the galleys consist of interlocking modular units, take the same number of borings or observation pits as for infiltration trenches. Do not confuse these galleys with vaults storing water for purposes of underground detention, which do not contain perforations.

Applicability

Subsurface structures are constructed to store stormwater temporarily and let it percolate into the underlying soil. These structures are used for small drainage areas (typically less than 2 acres). They are feasible only where the soil is adequately permeable and the maximum water table and/or bedrock

elevation is sufficiently low. They can be used to control the quantity as well as quality of stormwater runoff, if properly designed and constructed. The structures serve as storage chambers for captured stormwater, while the soil matrix provides treatment.

Without adequate pretreatment, subsurface structures are not suitable for stormwater runoff from land uses or activities with the potential for high sediment or pollutant loads. Structural pretreatment BMPs for these systems include, but are not limited to, deep sump catch basins, proprietary separators, and oil/grit separators. They are suitable alternatives to traditional infiltration trenches and basins for space-limited sites. These systems can be installed beneath parking lots and other developed areas provided the systems can be accessed for routine maintenance.

Subsurface systems are highly prone to clogging. Pretreatment is always required unless the runoff is strictly from residential rooftops.

Effectiveness

Performance of subsurface systems varies by manufacturer and system design. Although there are limited field performance data, pollutant removal efficiency is expected to be similar to those of infiltration trenches and basins (i.e., up to 80% of TSS removal). MassDEP awards a TSS removal credit of 80% for systems designed in accordance with the specifications in this handbook.

Planning Considerations

Subsurface structures are excellent groundwater recharge alternatives where space is limited. Because infiltration systems discharge runoff to groundwater, they are inappropriate for use in areas with potentially higher pollutant loads (such as gas stations), unless adequate pretreatment is provided. In that event, oil grit separators, sand filters or equivalent BMPs must be used to remove sediment, floatables and grease prior to discharge to the subsurface structure.

Design

Unlike infiltration basins, widely accepted design standards and procedures for designing subsurface structures are not available. Generally, a subsurface structure is designed to store a "capture volume" of runoff for a specified period of "storage time." The definition of capture volume differs depending on the purpose of the subsurface structure and the stormwater management program being used. Subsurface structures should infiltrate good quality runoff only. Pretreatment prior to infiltration is essential.
The composition, configuration and layout of subsurface structures varies considerably depending on the manufacturer. Follow the design criteria specified by vendors or system manufacturers. Install subsurface structures in areas that are easily accessible for routine and non-routine maintenance.

As with infiltration trenches and basins, install subsurface structures only in soils having suitable infiltration capacities as determined through field testing. Determine the infiltrative capacity of the underlying native soil through the soil evaluation set forth in Volume 3. Never use a standard septic system percolation test to determine soil permeability because this test tends to greatly overestimate the infiltration capacity of soils.

Subsurface structures are typically designed to function off-line. Place a flow bypass structure upgradient of the infiltration structure to convey high flows around the structure during large storms.

Design the subsurface structure so that it drains within 72 hours after the storm event and completely dewaters between storms. Use a minimum draining time of 6 hours to ensure adequate pollutant removal. Design all ports to be mosquito-proof, i.e., to inhibit or reduce the number of mosquitoes able to breed within the BMP.

The minimum acceptable field infiltration rate is 0.17 inches per hour. Subsurface structures must be sized in accordance with the procedures set forth in Volume 3. Manufactured structures must also be sized in accordance with the manufacturers' specifications. Design the system to totally exfiltrate within 72 hours.

Design the subsurface structure for live and dead loads appropriate for their location. Provide measures to dissipate inlet flow velocities and prevent channeling of the stone media. Generally, design the system so that inflow velocities are less than 2 feet per second (fps).
All of these devices must have an appropriate number of observation wells, to monitor the water surface elevation within the well, and to serve as a sampling port.

Each of these different types of structures, with the exception of perforated pipes in leaching fields similar to Title 5 systems, must have entry ports to allow worker access for maintenance, in accordance with OSHA requirements.

Construction

Stabilize the site prior to installing the subsurface structure. Do not allow runoff from any disturbed areas on the site to flow to the structure. Rope off the area where the subsurface structures are to be placed. Accomplish any required excavation with equipment placed just outside of this area. If the size of the area intended for exfiltration is too large to accommodate this approach, use trucks with low-pressure tires to minimize compaction. Do not allow any other vehicles within the area to be excavated. Keep the area above and immediately surrounding the subsurface structure roped off to all construction vehicles until the final top surface is installed (either paving or landscaping). This prevents additional compaction. When installing the final top surface, work from the edges to minimize compaction of the underlying soils.

Before installing the top surface, implement erosion and sediment controls to prevent sheet flow or wind blown sediment from entering the leach field. This includes, but is not limited to, minimizing land disturbances at any one time, placing stockpiles away from the area intended for infiltration, stabilizing any stockpiles through use of vegetation or tarps, and placing sediment fences around the perimeter of the infiltration field.

Provide an access port, man-way, and observation well to enable inspection of water levels within the system. Make the observation well pipe visible at grade (i.e., not buried).

Maintenance

Because subsurface structures are installed underground, they are extremely difficult to maintain. Inspect inlets at least twice a year. Remove any debris that might clog the system. Include mosquito controls in the Operation and Maintenance Plan.

Adapted from:
Connecticut Department of Environmental Conservation. Connecticut Stormwater Quality Manual. 2004.
MassHighway. Storm Water Handbook for Highways and Bridges. May 2004.

Dry Wells

Description: Dry wells are small excavated pits, backfilled with aggregate, and used to infiltrate uncontaminated runoff from non-metal roofs or metal roofs located outside the Zone II or Interim Wellhead Protection Area of a public water supply and outside an industrial site. Do not use dry wells to infiltrate any runoff that could be significantly contaminated with sediment and other pollutants. Never use dry wells to infiltrate runoff from land uses with higher potential pollutant loads, including parking lot runoff.

Ability to meet specific standards

Standard	Description
2 - Peak Flow	N/A
3 - Recharge	Provides groundwater recharge.
4 - TSS Removal	80% TSS removal for runoff from non-metal roofs and runoff from metal roofs that are located outside the Zone II or Interim Wellhead Protection Area of a public water supply and outside an industrial site.
5 - Higher Pollutant Loading	May not be used for runoff from land uses with higher potential pollutant loads, May not be used for runoff from metal roofs located at industrial sites.
6 - Discharges near or to Critical Areas	Within a Zone II or IWPAmay be used only for runoff from nonmetal roofs. Outside a Zone II or Interim Wellhead Protection Area, may be used for both metal and nonmetal roofs provided the roof is not located on an industrial site.
7 - Redevelopment	For rooftop runoff from non-metal roofs and from metal roofs located outside a Zone II or IWPA and outside industrial sites.

Advantages/Benefits:

- Applicable for runoff from non-metal roofs and metal roofs located outside of the Zone IIs or IWPA of a public water supply, and outside industrial sites
- Can reduce the size and cost of downstream BMPs and/or storm drains.
- Feasible for new development and retrofit areas
- Provides groundwater recharge

Disadvantages/Limitations:

- Clogging likely when used for runoff other than that from residential rooftops.
- May experience high failure rate due to clogging.
- Only applicable in small drainage areas of one acre or less.
- When located near buildings, potential issues with water seeping into cellars or inducing cracking or heaving in slabs
- Overflow from roof leader must be directed away from sidewalks or driveways

Pollutant Removal Efficiencies

• Total Suspended Solids (TSS)	80%
• Nutrients (Nitrogen, phosphorus)	Insufficient data
• Metals (copper, lead, zinc, cadmium)	Insufficient data
• Pathogens (coliform, e coli)	Insufficient data

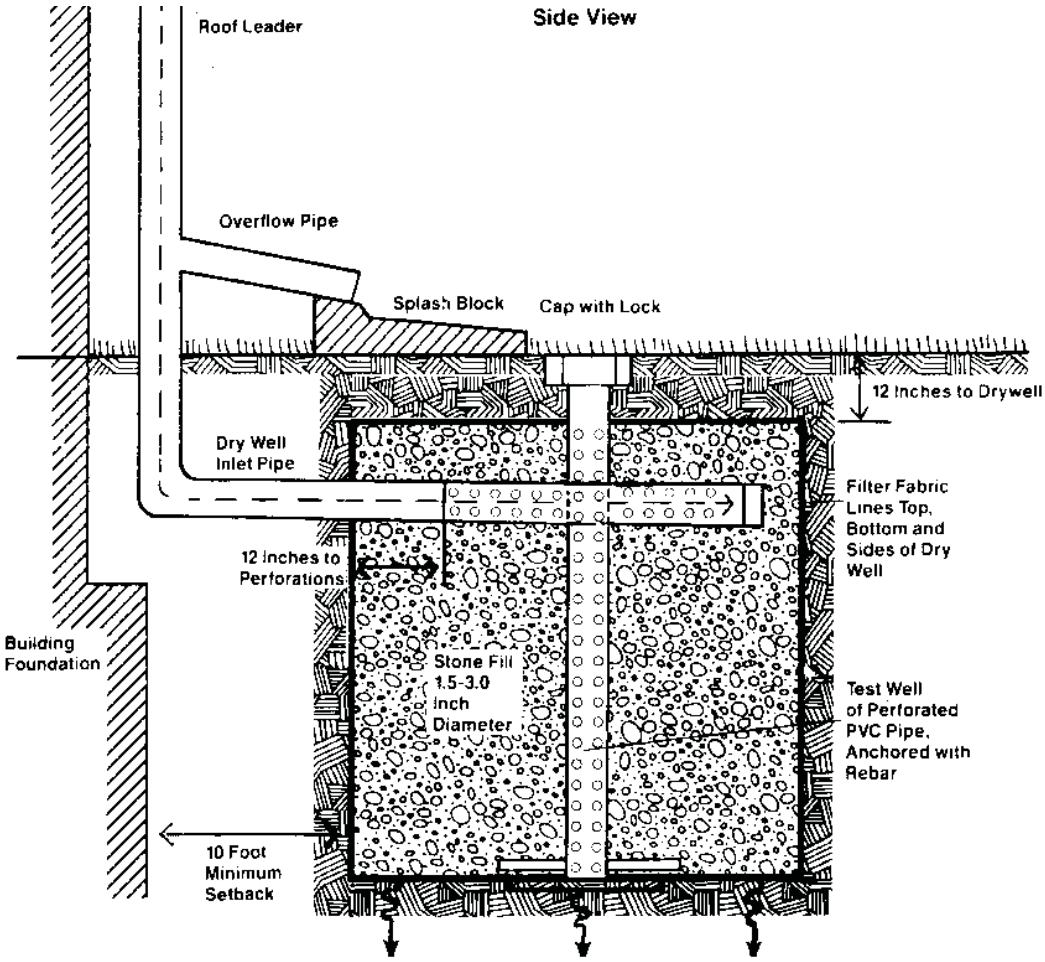

adapted from the University of New Hampshire

Maintenance

Activity	Frequency
Inspect dry wells.	After every major storm in the first few months after construction to ensure proper stabilization and function. Thereafter, inspect annually.
Measure the water depth in the observation well at 24- and 48-hour intervals after a storm. Calculate clearance rates by dividing the drop in water level (inches) by the time elapsed (hr).	See activity

Special Features

For uncontaminated runoff from non-metal roofs. May be used for runoff from metal roofs located outside the Zone II or Interim Wellhead Protection Area of a public water supply and outside an industrial site. A metal roof is a roof made of galvanized steel or copper.

LID Alternative

Take advantage of LID site design credit and direct runoff from non-metal roofs to a qualifying pervious area. See Volume 3 for information on disconnecting roof runoff.
Consider green roof.