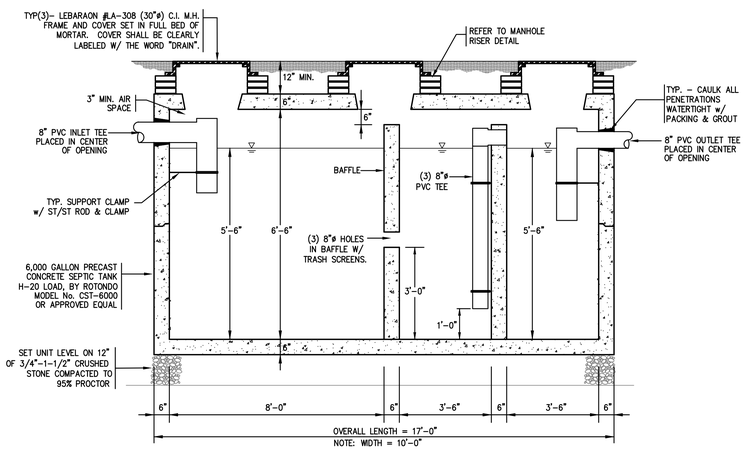

1 CO.3 WATER QUALITY INLET DETAIL
N.T.S.

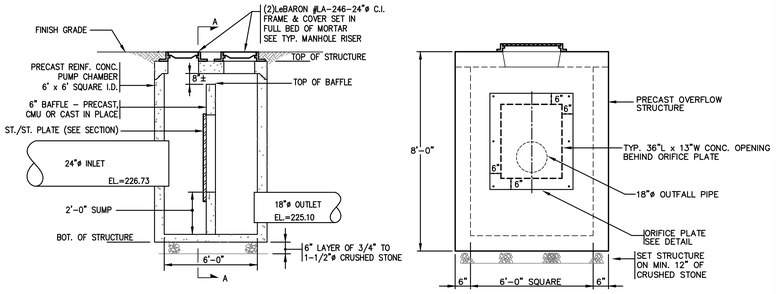

SECTION A–A

OUTLET CONTROL STRUCTURE #1

INFLOW PIPE INV.	= 226.73
OUTFLOW PIPE INV.	= 225.10
OUTFLOW PIPE SIZE	= (1) 18"
OUTFLOW PIPE SLOPE	= 0.024
OUTFLOW PIPE CAP.	= 17.65 cfs
TOP OF BED	= 229.39
BOTT. OF BED	= 226.06
100 YR. STORM ELEV.	= 228.63
TOP OF STRUCTURE	= 231.48
BOTT. OF STRUCTURE	= 223.48
*SEE ORIFICE PLATE DETAIL	

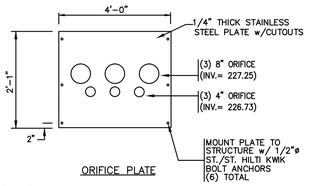

ORIFICE PLATE

2 CO.3 OUTLET CONTROL STRUCTURE DETAIL
N.T.S.

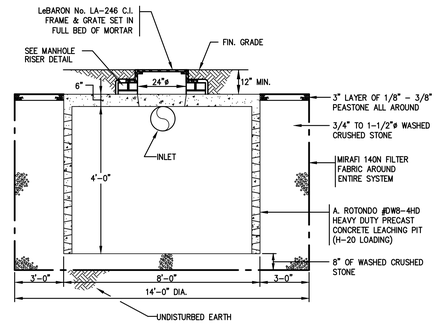

3 CO.3 LEACHING PIT DETAIL
N.T.S.

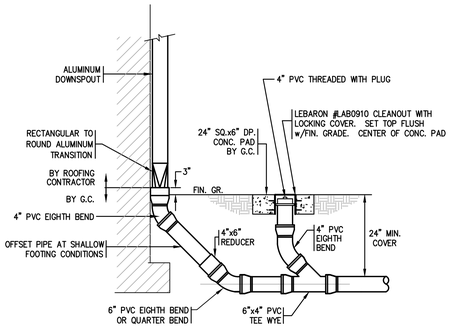

4 CO.3 DOWNSPOUT CONNECTION AT GRADE DETAIL
N.T.S.

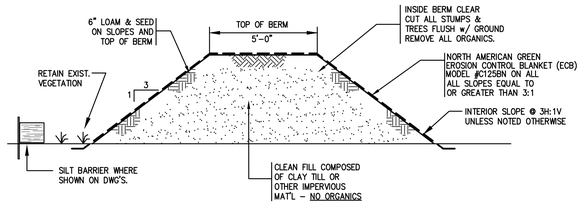

5 CO.3 SECTION THRU BERM
N.T.S.

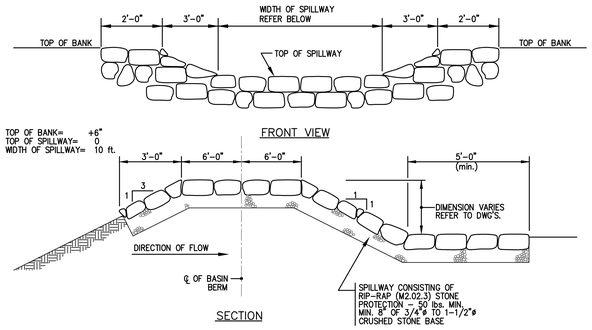

7 CO.3 TYPICAL SPILLWAY DETAIL
N.T.S.

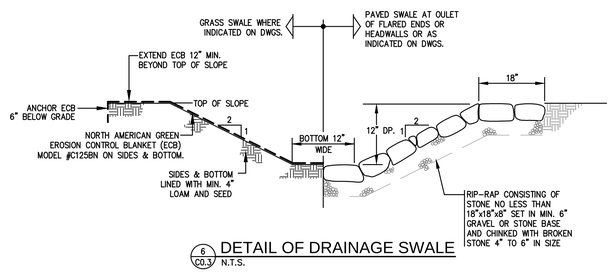

6 CO.3 DETAIL OF DRAINAGE SWALE
N.T.S.

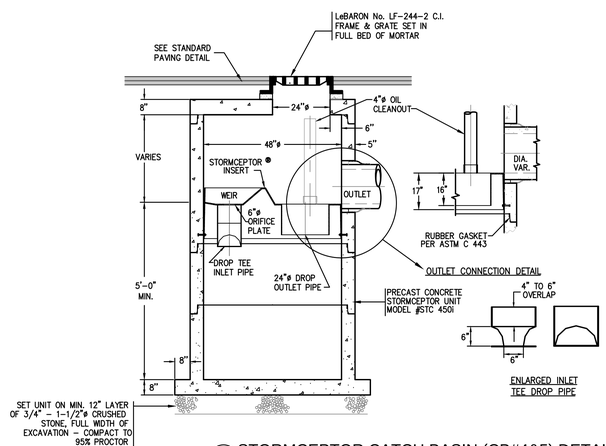

8 CO.02 STORMCEPTOR CATCH BASIN (CB#4&5) DETAIL
N.T.S.

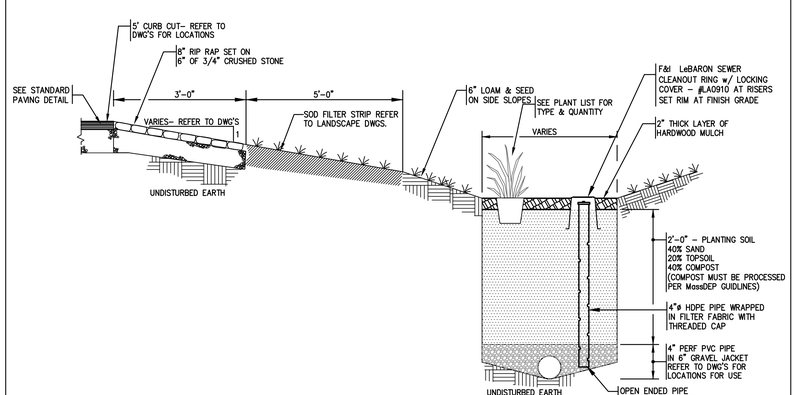

9 CO.4 BIORETENTION GARDEN SECTION
N.T.S.

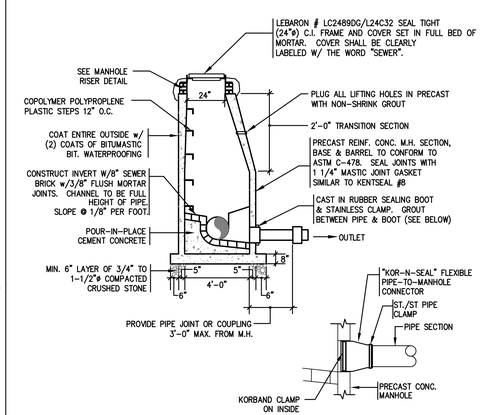

MANHOLE SEALING BOOT

10 CO.4 STANDARD SEWER MANHOLE DETAIL
N.T.S.

KEYPLAN

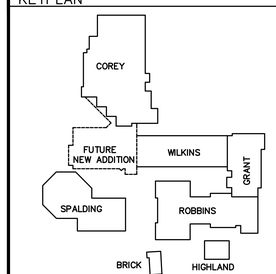

REVISIONS NO.	DATE	REMARKS	BY

HMFH Architects, Inc.
100 Billings Allen Drive
Cambridge, MA 02139
t. 617.492.2200
f. 617.492.2275
www.HMFH.com
Architecture · Programming · Master Planning

GARCIA-GALUSKA-DESOUSA CONSULTING ENGINEERS, INC.
02215-1199 • 508-988-0200 • FAX: 508-988-0883 • EMAIL: info@ggd.com

SITE PLAN REVIEW APPLICATION
08-16-2010

Carlisle Public School
Carlisle, MA
Site Details

SCALE: As indicated DRAWN BY: NCK CHECKED BY: CMG

DRAWING NUMBER
C0.3

JOB NUMBER #93206

COPYRIGHT HMFH ARCHITECTS, INC.