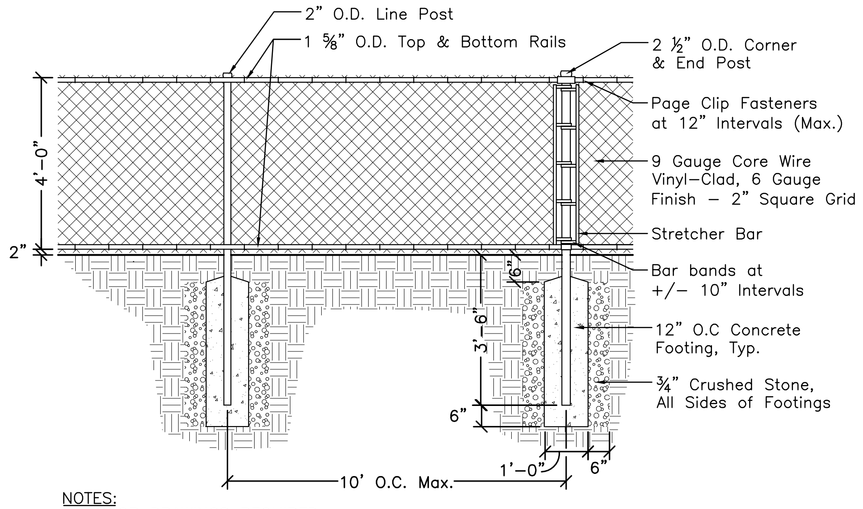

NOTES:
1. SHOP DRAWINGS REQUIRED.
2. All members to be black vinyl–clad.

1 VINYL CLAD CHAIN LINK FENCE (4' HT.)

Scale: 1/2" = 1'–0"

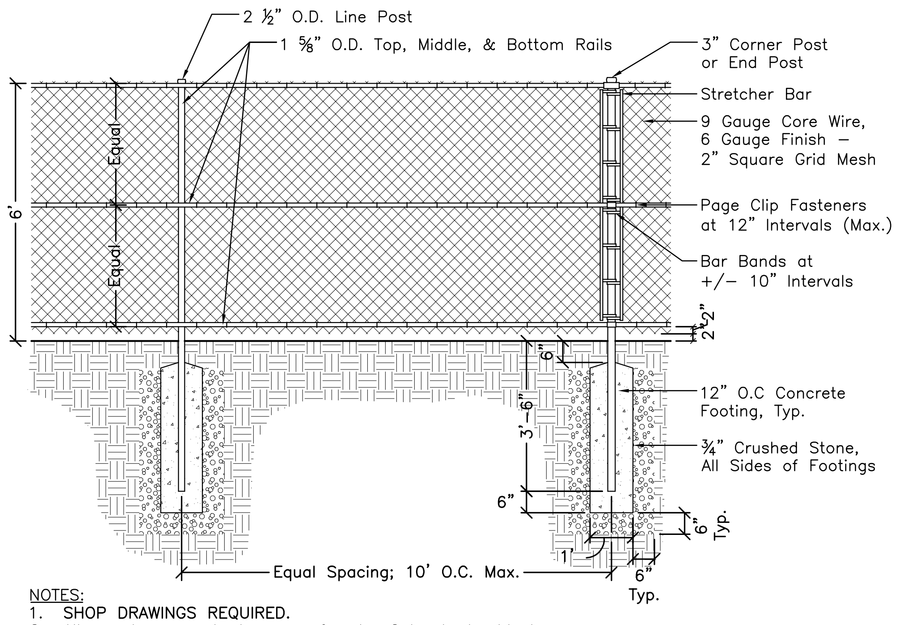

NOTES:
1. SHOP DRAWINGS REQUIRED.
2. All members are to be permafused. Color to be black.

1 VINYL CLAD CHAIN LINK FENCE (6' HT.)

Scale: 1/2" = 1'–0"

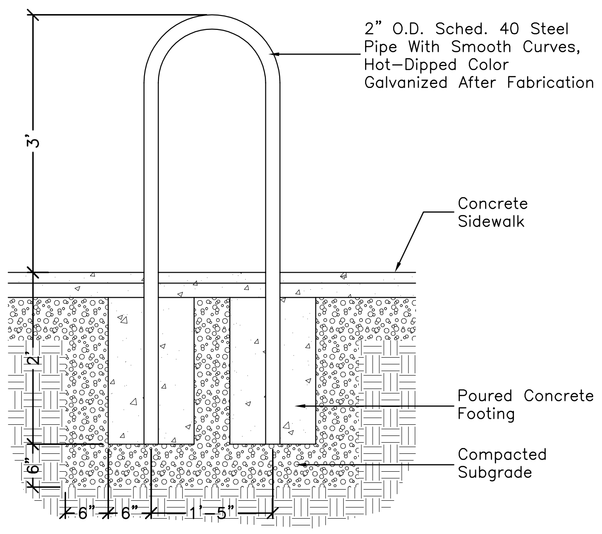

NOTES:
1. SHOP DRAWINGS REQUIRED.
2. Rack To Be: "Bike Link" #BL–2B From Bike Security Racks Co. of Rumney, NH (800.545.2757) Or Approved Eq.

1 BIKE RACK

Scale: 1" = 1'–0"

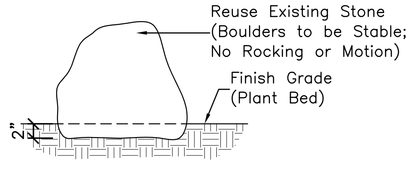

STONE IN PLANT BED

NOTES:
1. Final layout of stones to be approved by Landscape Architect in field.

1 SITTING BOULDER / BOULDER EDGE

Scale: 1" = 1'–0"

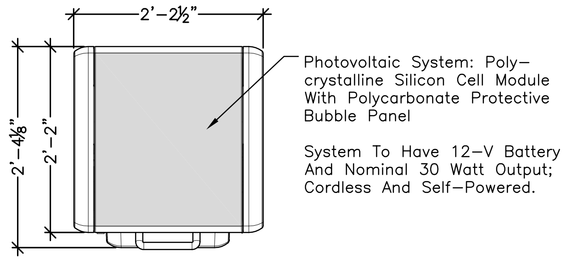

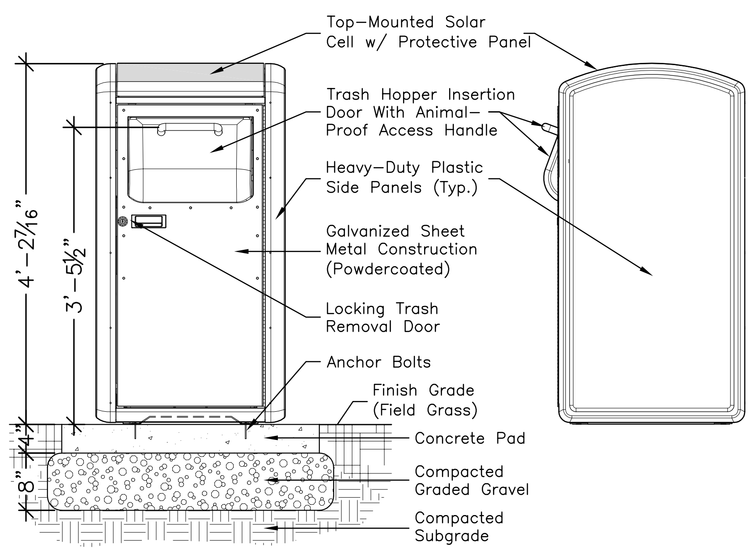

1 TRASH RECEPTACLE

Scale: 1" = 1'–0"

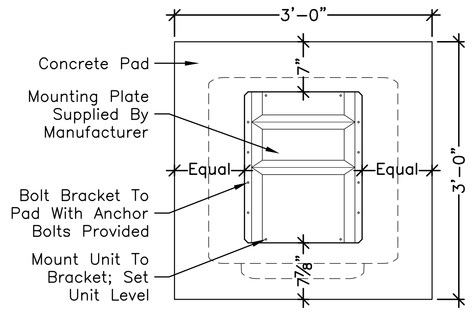

MOUNTING PLAN

NOTES:
1. Solar Trash Compactor to be "BigBelly Solar Compactor" by Seahorse Power Company/ BigBelly Solar of Needham, MA (888–820–0300) with Animal Latch Option, or Approved Equal.
2. System to be fully automated, with a max. compaction force of 1250 lbs., cycle time of 41 seconds or better, and safety controls to prevent user access to compaction area.
3. Polyester Powder Coat color and Plastic Panel color to be selected by Landscape Architect and Owner from Manufacturer's full range of color options.
4. Submit Manufacturer's information for approval. Mount according to manufacturer's instructions.

1 RECYCLING BIN

Scale:

1 H.C. RAMP HANDRAILS

Scale:

1 BOLLARDS WITH LIGHTS

Scale:

1 POST LIGHTS

Scale:

1 PLAY STRUCTURE

Scale:

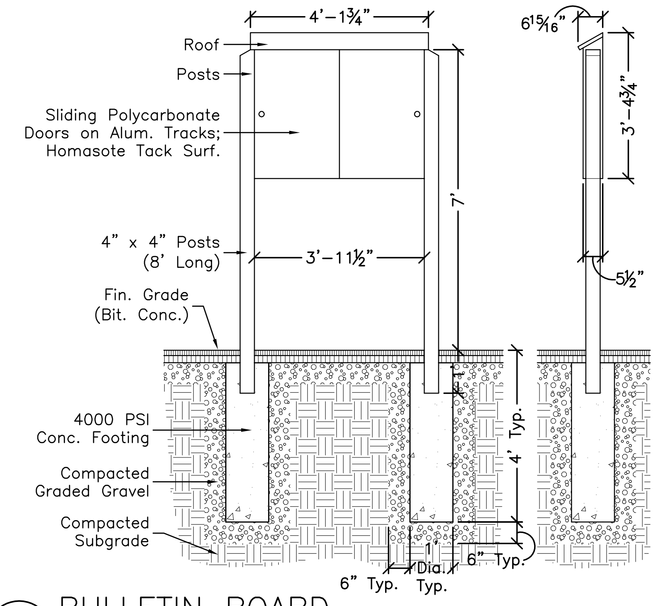

NOTES:
1. Bulletin board shall be Model GL–MC30 by OptiMA, Inc., or approved equal. Posts to be set of 2 mounting posts for outdoor message center units (model # GL–MCP96 by OptiMA, Inc.), or approved equal. Install per manufacturer's instructions.
2. All hardware to be galvanized.
3. Provide ratchet lock for sliding glass doors and two keys.
4. Post and bulletin board color to be black.

1 BULLETIN BOARD

Scale: 1/2" = 1'–0"

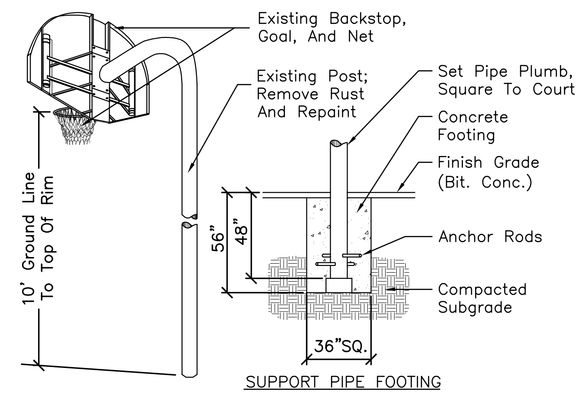

SUPPORT PIPE FOOTING

1 BASKETBALL GOAL

Not to Scale

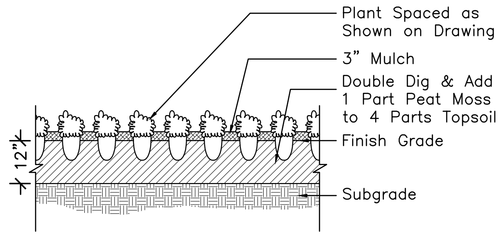

1 G.C. & PEREN. PLANTING

Scale: 1/2" = 1'–0"

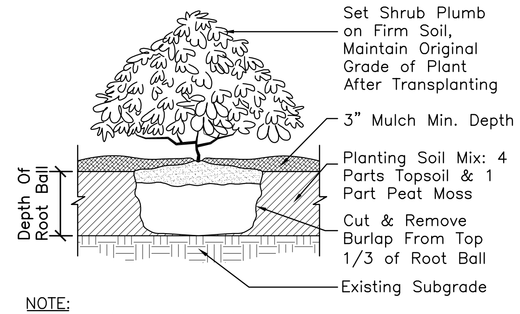

NOTE:
1. New shrub beds to have a minimum of one foot planting soil.

1 SHRUB PLANTING

Scale: 1/2" = 1'–0"

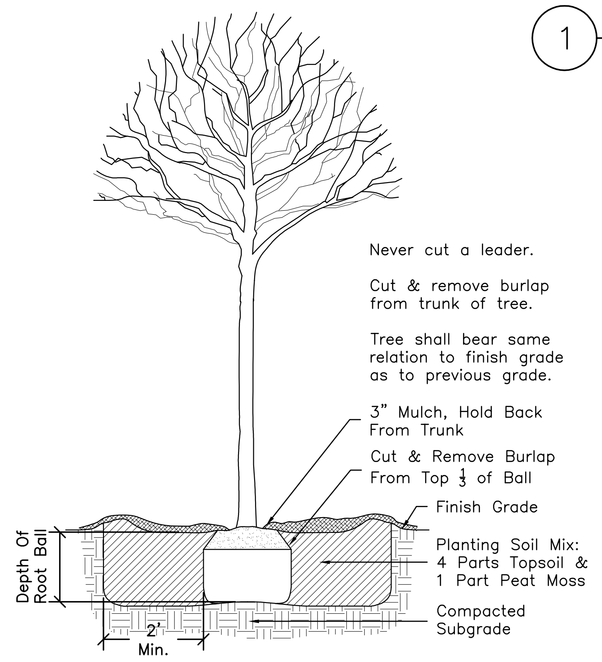

1 TREE PLANTING

Scale: 1/2" = 1'–0"

HMFH Architects, Inc.
130 Bishop Allen Drive
Cambridge, MA 02139
t. 617.492.2200
f. 617.492.9070
www.HMFH.com
Architecture · Programming · Master Planning

CBA Landscape Architects LLC
212 ELM STREET | SOMERVILLE, MA 02144 | www.cbalandscape.com
phone 617.623.1424 | fax 617.623.9672 | landscape architecture urban design environmental planning

SITE PLAN REVIEW
08-16-2010

TRUE NORTH
PLAN NORTH

Carlisle Public School
Carlisle, MA
SITE DETAILS

SCALE: As Shown DRAWN BY: KRF CHECKED BY: CCB

REVISIONS NO.	DATE	REMARKS	BY

DRAWING NUMBER
L6

JOB NUMBER 600919

©COPYRIGHT HMFH ARCHITECTS, INC.